Page	Title of schematic page	Rev.	Date
01	Page List	1A	
02	Block Diagram	1A	
03	Change List	1A	
04	SKL MCP(DISPLAY/JTAG)	1A	
05	SKL MCP(MEMORY/CHA/CHB)	1A	
06	SKL MCP(CFG/RSVD)	1A	
07	SKL MCP(POWER-1)	1A	
08	SKL MCP(POWER-2)	1A	
09	SKL PCH(RTC/CLK)	1A	
10	SLK PCH(PCIE/USB/SPM)	1A	
11	SKL PCH(HDA/LPC/SPI/SMB)	1A	
12	SKL PCH(GPIO/UART/I2C)	1A	
13	SKL PCH(POWER)	1A	
14	SKL PCH(GND)	1A	
15	DDR3 DIMM0-RVS (6H)	1A	
16	DDR3 DIMM1-STD (5.2H)	1A	
17	LVDS/NFC	1A	
18	HDMI	1A	
19	HOLE/EMI/KB	1A	
20	EC(IT8528/HX)/FLASH	1A	
21	USB3.0/USB CHARGER	1A	
22	MB TO USB/B/LED	1A	
23	LAN (RTL8111HS)	1A	
24	WLAN	1A	
25	CR RTS5250S/RTS5227S(SD4/SD3)	1A	
26	Audio ALC286S	1A	
27	HDD/ODD/TP/FAN	1A	
28	PSW/DMIC/CAMERA/TS	1A	
29	SSD M2 CON	1A	
30	AMP(YDA148)	1A	
31	POWER +VCC_CORE (ISL95859)	1A	
32	POWER +VCCCORE (ISL95859-1)	1A	
33	POWER VCC3&VCC5(TPS51225B)	1A	
34	POWER 1.35VSUS/VTT_MEM	1A	
35	POWER 1.0V_S5/1.8_S5(G5335)	1A	
36	POWER +1.0V_VCCEDRAM / +12V	1A	
37	POWER CHARGE (BQ24780)	1A	
38	PWR AD IN/BAT IN/Thermal	1A	
39	PowerMAP	1A	
40	SMBUS	1A	
41	Power Sequence	1A	
42	POWER DIAGRAM_V	1A	
43	HSW XDP & APS	1A	

* : No mount
E@ : For GT3 CPU

www.aitech1.ru

FF9 SKL ULT BLOCK DIAGRAM

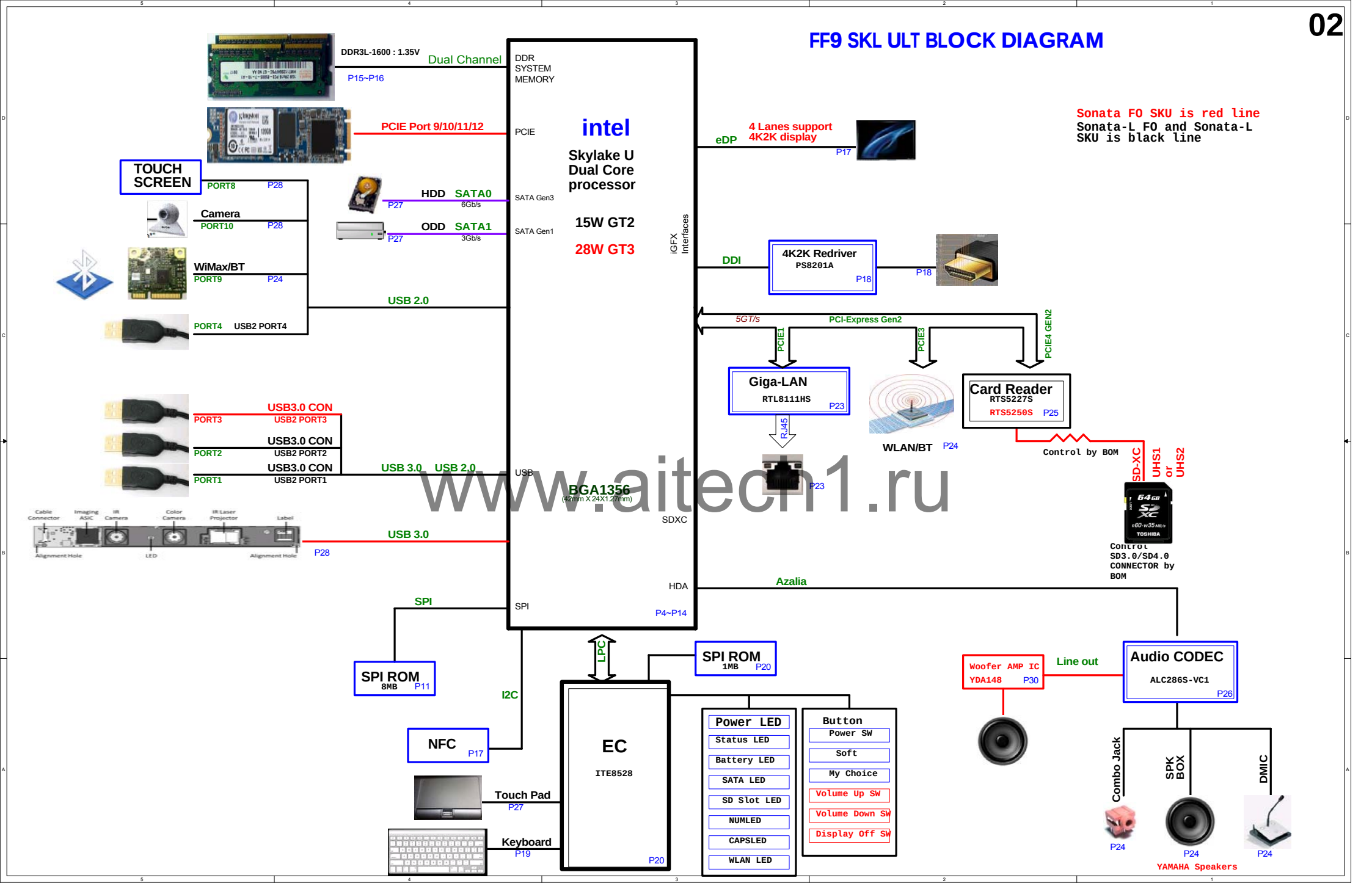

www.aitech1.ru

Change List

FF9-MB-SLK-PP_72-0408

Page38 -- Add SHIP SW1 of Nornal short for Shipping Mode

Page38 -- DEL J1 jump and Add D35 ESD

Page12 -- Add Net name:Panel_ID1 to separate FHD and HD for BIOS request.And we will add GND wire for HD

Page17 -- Add Net name:Panel_ID1 to separate FHD and HD for BIOS request.And we will add GND wire for HD

Page15 -- Change C259,C261,C262,C264,C267,C269,C270,C272,C274,C258,C260 SIZE to 0402 for ME team request

Page16 -- Change C292,C294,C296,C297, C298,C301,C304,C306,C307, C293,C295 SIZE to 0402 for ME team request

Page20 -- 1. Change USB_SKU# form GPI7 to GPF1 2.Add 12V_OCP net name on ADC7 for H-sku

Page11 -- Change R158,R160,R161,R162,R163 from 15 to 22 ohm

FF9-MB-SLK-PP_72-0414

Page38--1.Change SHIP SW1 from SPVR310100 to SPVR110100 for Nornal open type)
2.Add PR350 100K and D35 PQ67 for SHIP mode

Page 17-- Cancel net name Panel_ID1 on CON4#34

Page 12-- Cancel net name Panel_ID1

Page 20-- Change KR68 from 200K to 91K for PP

Page 36--Add PF15 for +12V OCP

Page 20--. Resume original circuit for USB_SKU#

FF9-MB-SLK-PP_72-0415

Page 18--Change from 4.99K to 4.12K for solve HDMI fail issue

FF9-MB-SLK-PP_72-0416

Page 26-- Change AR165 from 10K to 10ohm for solve Audio pop noise issue

Page 28--Change U22 from G547H1PB1U to G547H1P81U for solve Peak OCP issue

Page 28--Change C808 1U from no-mount to mount for 2D camera drop issue

FF9-MB-SLK-PP_72-0420

Page 26-- Change AR87/AR88 to 33ohm and AC150/AC151 to 56P for EMI request

Page 28-- Change L11/L23 from no-mount to mount for EMI request

Page 36-- Change PR217/PC200 from no-mount to mount for EMI request

Page 28--Change U24 part number from BU33TD3WG-GTR to G9090-330t11u for 2D power sw

FF9-MB-SLK-PP_72-0421

Page 26 -- Change AD1 from mount to no mount

FF9-MB-SLK-PP_72-0421A

Page 9--Change C180 and C181 from 12P to 10P

FF9-MB-SLK-PP_72-0421B

Page 30-- Add AR178, AR179 for power limit

Page 30--Add AR150, AR81 for power limit

FF9-MB-SLK-PP_72-0423

Change 0ohm to short pad for list

Page 28--Change CCD_PWR to +5V for Q21 Gate

FF9-MB-SLK-PP_72-0423A

Change AC37,AC38,C184,C185,C186,C252,C255 C283,C285,C287,C289,C500,C564,C568,LC5,AC170 C229,C249,C250,C251,C253,C256,C257,C276,C277 C278,C280,C284,C286,C288,C290,C309,C311,C313 C314,C559,C569,C571,MC4,C808,C568 value from 1U_6.3V_X7R to 1U_6.3V_X5R

Page 18--Change HDMI re-driver part number from PS8407A to PS8201A

FF9-MB-SLK-PP_72-0423B

Page 10--Change R486 from mount to no mount

FF9-MB-SLK-PP_72-0424

Page 31-- PR32 change from 1.43 to 1.21
PC31 change from 2200p to 1500p
PC26 change from 680p to 4700P
PC20 reserve
fine tune VCCSA

Page 31-- PR10 change from 2.61kohm to 4.32kohm
fine tune GFX

Page 37-- change PR246/PR248 from 10ohm to 0ohm for charge offset issue.

Page 38-- add PQ68 and PR351 no-mount for power saving

Page 37--change PR255 and PR348 form 1M to 20k for VA+ discharge issue

Page 31--PR30 from 102kohm to 95.3kohm/E@102kohm
PR34 form 95.3kohm to 57.6kohm for fine tune Iout raw.

Page 31--PR42 change from 1.62kohm to 1.65kohm
PC39 change to reserve for fine tune 28W CPU

Page 31--PR48 change from 2.61kohm to 4.32kohm

FF9-MB-SLK-PP_72-0506

Page 37--change PR255 and PR348 form 20k to 1M for VA+ discharge issue

Page 38--PD21, PD22, PR297, PQ54 reserve
PQ68, PR351 mount
PR295, PR299 change from 220k/196k to 1M for power saving

www.aitech1.ru

Quanta Computer Inc.		
PROJECT : FF9		
Size	Document Number	Rev 1A
	Change List	
Date: Wednesday, May 06, 2015	Sheet 3 of 43	

SkyLake ULT (DISPLAY)

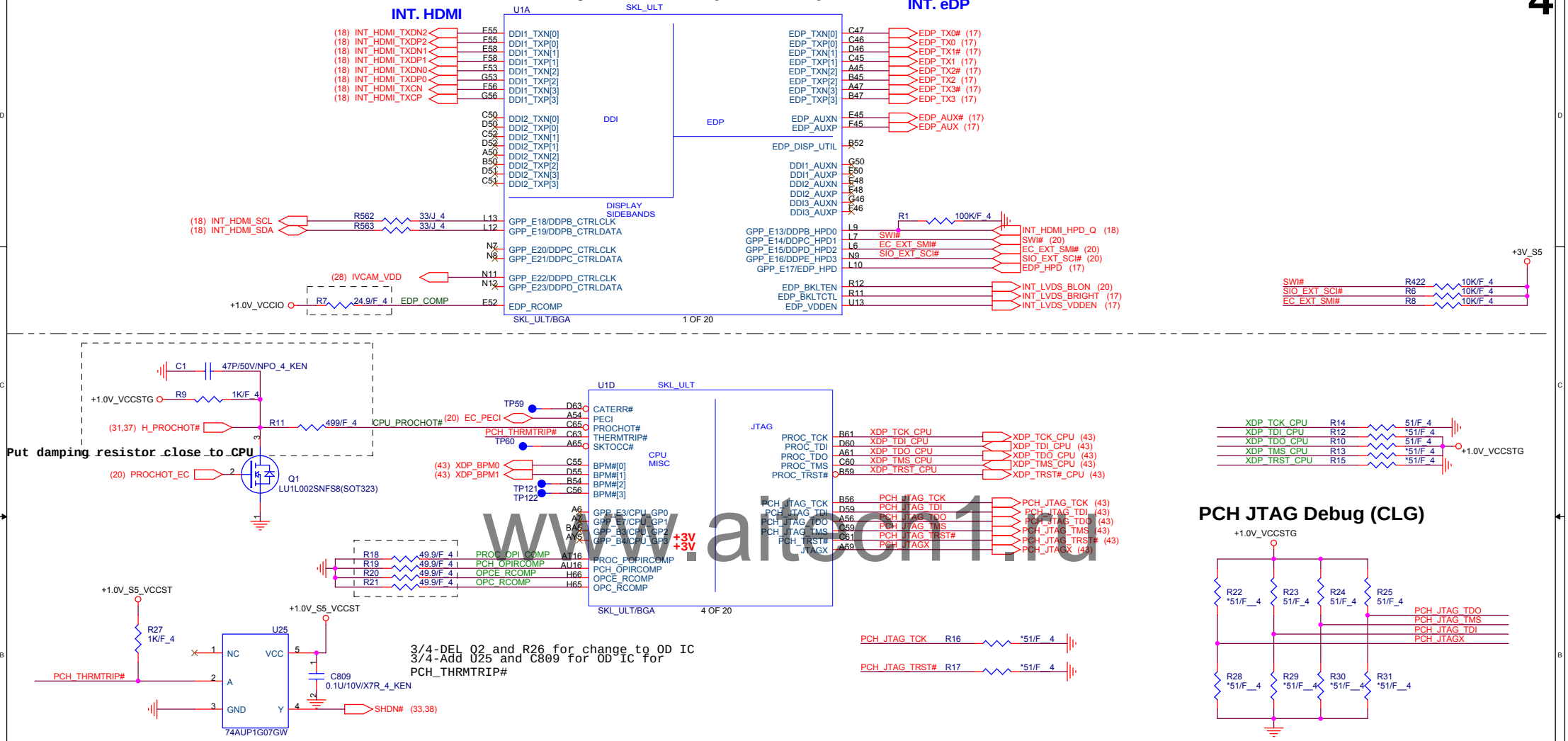

www.altech1.ru

Quanta Computer Inc.

PROJECT : FF9

Size	Document Number	Rev
	SLK MCP(Display/eDP)	1A

Date: Wednesday, May 06, 2015 Sheet 4 of 43

SkyLake ULT (DDR3L)

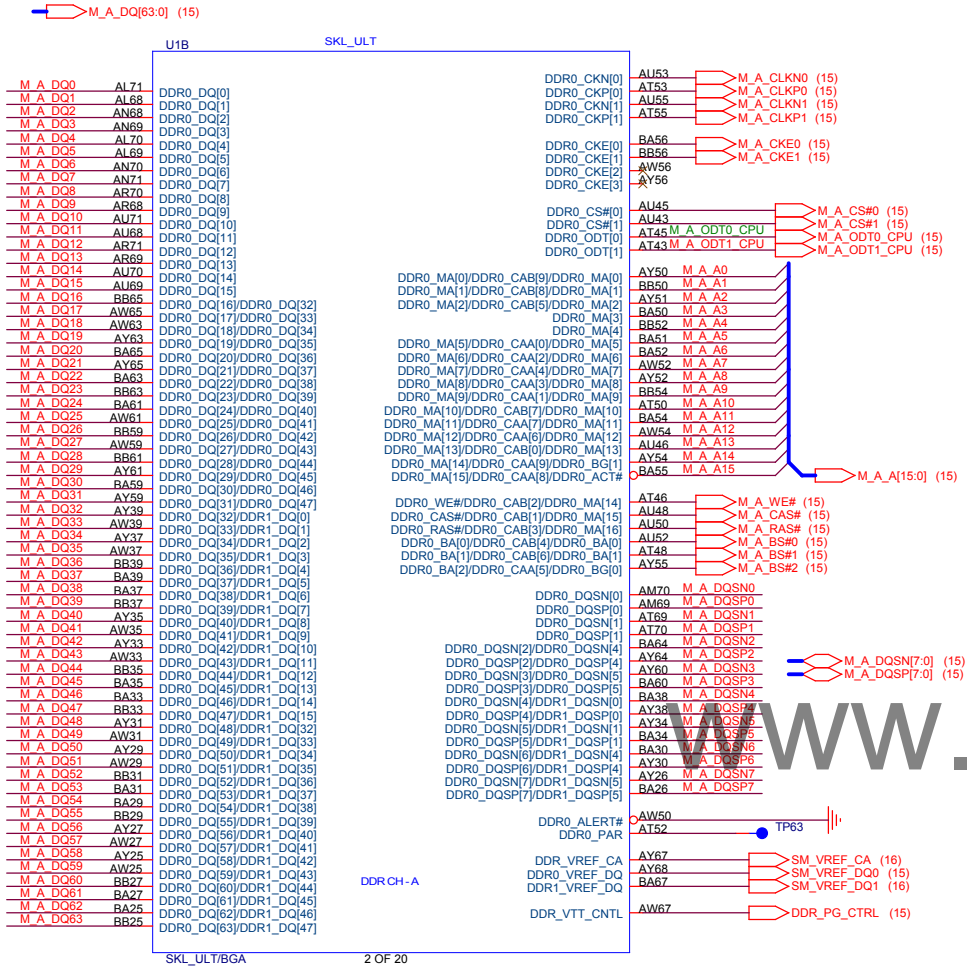

SkyLake ULT(DDR3L)

5

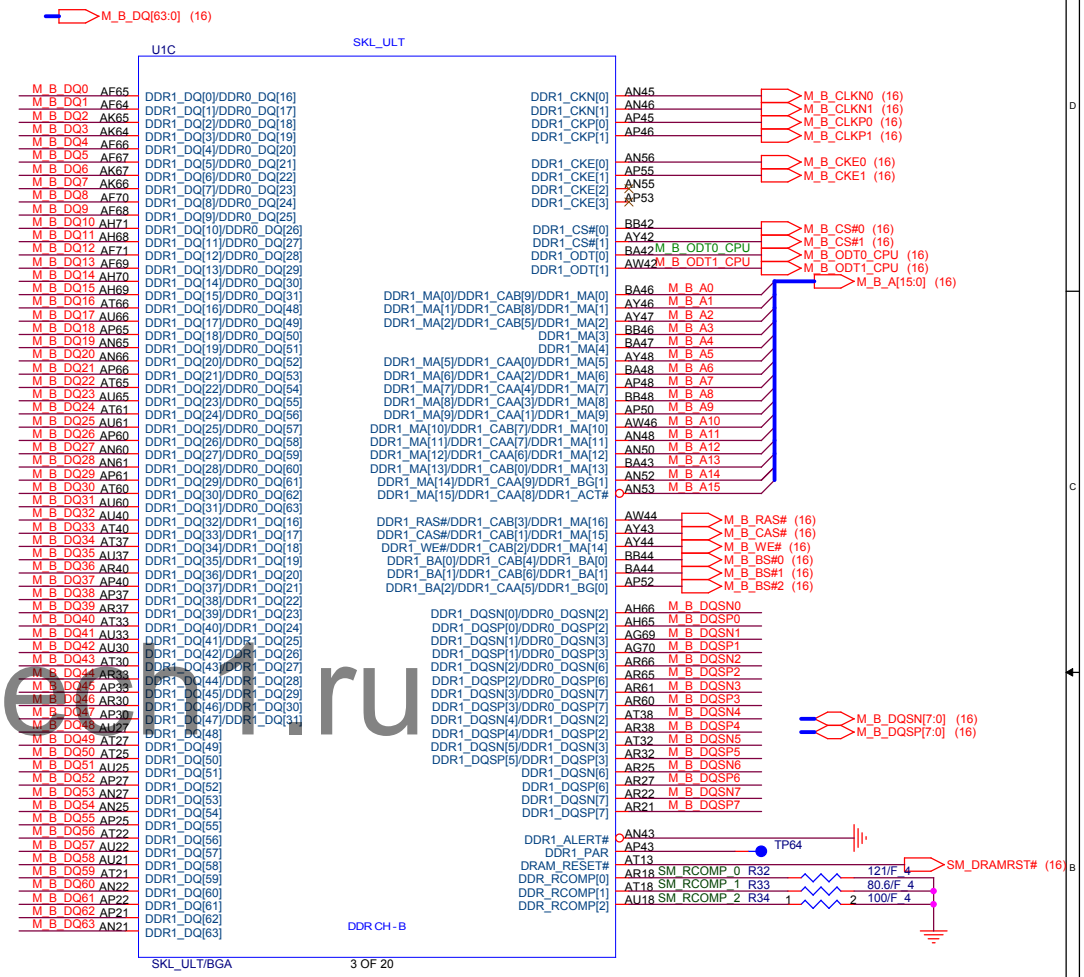

www.aite.ru

Quanta Computer Inc.		
PROJECT : FF9		
Size	Document Number	Rev
	SLK MCP(Memory)	1A
Date: Wednesday, May 06, 2015	Sheet 5 of 43	

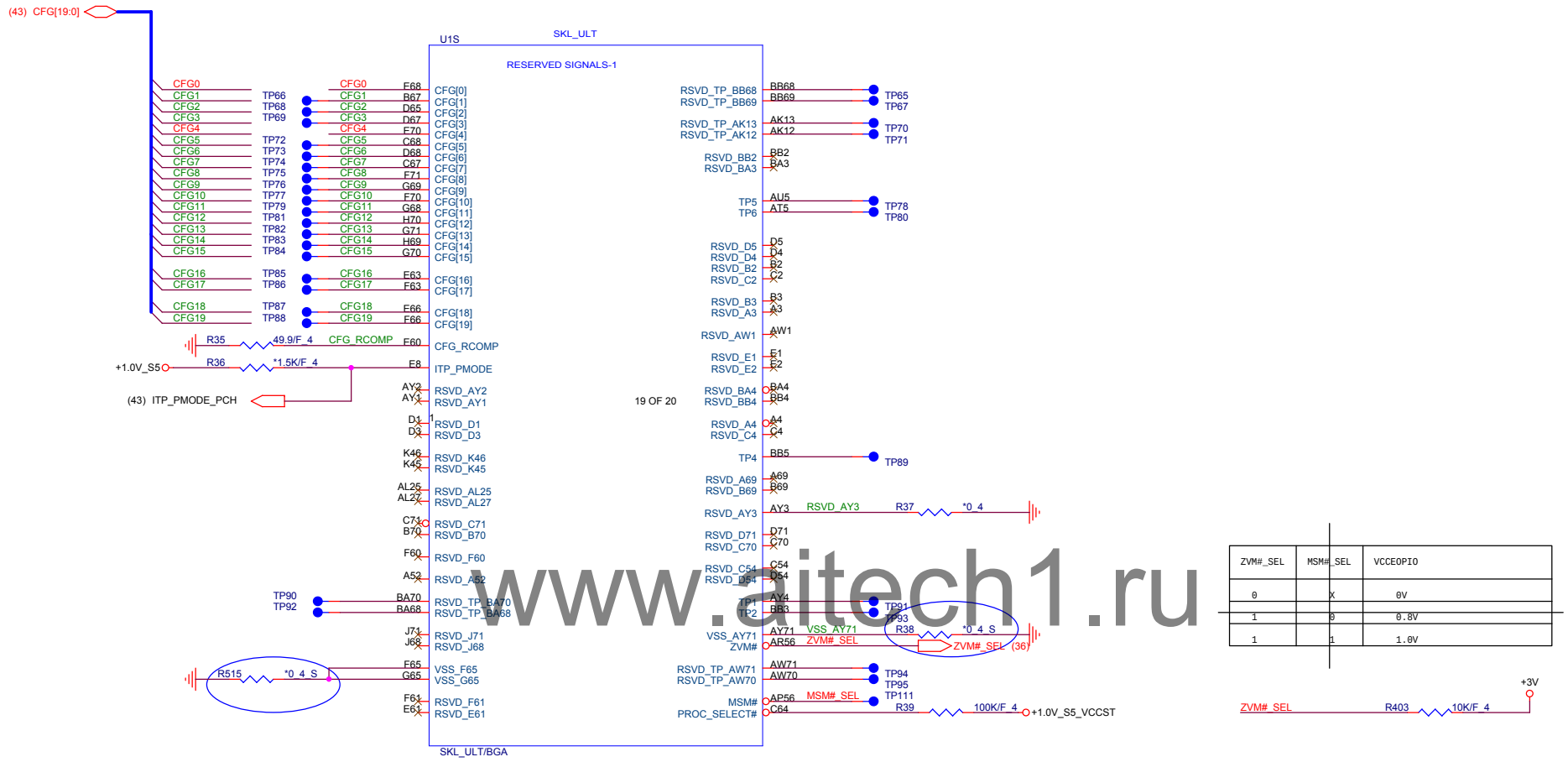

ZVM#_SEL	MSM#_SEL	VCCEOPIO
0	X	0V
1	0	0.8V
1	1	1.0V

www.aitech1.ru

Processor Strapping

	1	0	
CFG0 EAR-STALL/NOT STALL RESET SEQUENCE AFTER PCU PLL IS LOCKED	(DEFAULT) NORMAL OPERATION; NO STALL	STALL	CFG0 R40 *1K/F_4
CFG4 eDP enable:	DISABLED	ENABLED	CFG4 R41 1K/F_4

Quanta Computer Inc.

PROJECT : FF9

Size	Document Number	Rev
	SLK MCP(CFG)	1A

Date: Wednesday, May 06, 2015 Sheet 6 of 43

SkyLake ULT MCP(POWER-1)

SkyLake ULT:22 15W IccMax :28A
23e 15W IccMax: 28A
23e 28W IccMax: 29A

+VCC_GFX : 22 15W IccMax :31A
23e 28W IccMax: 64A

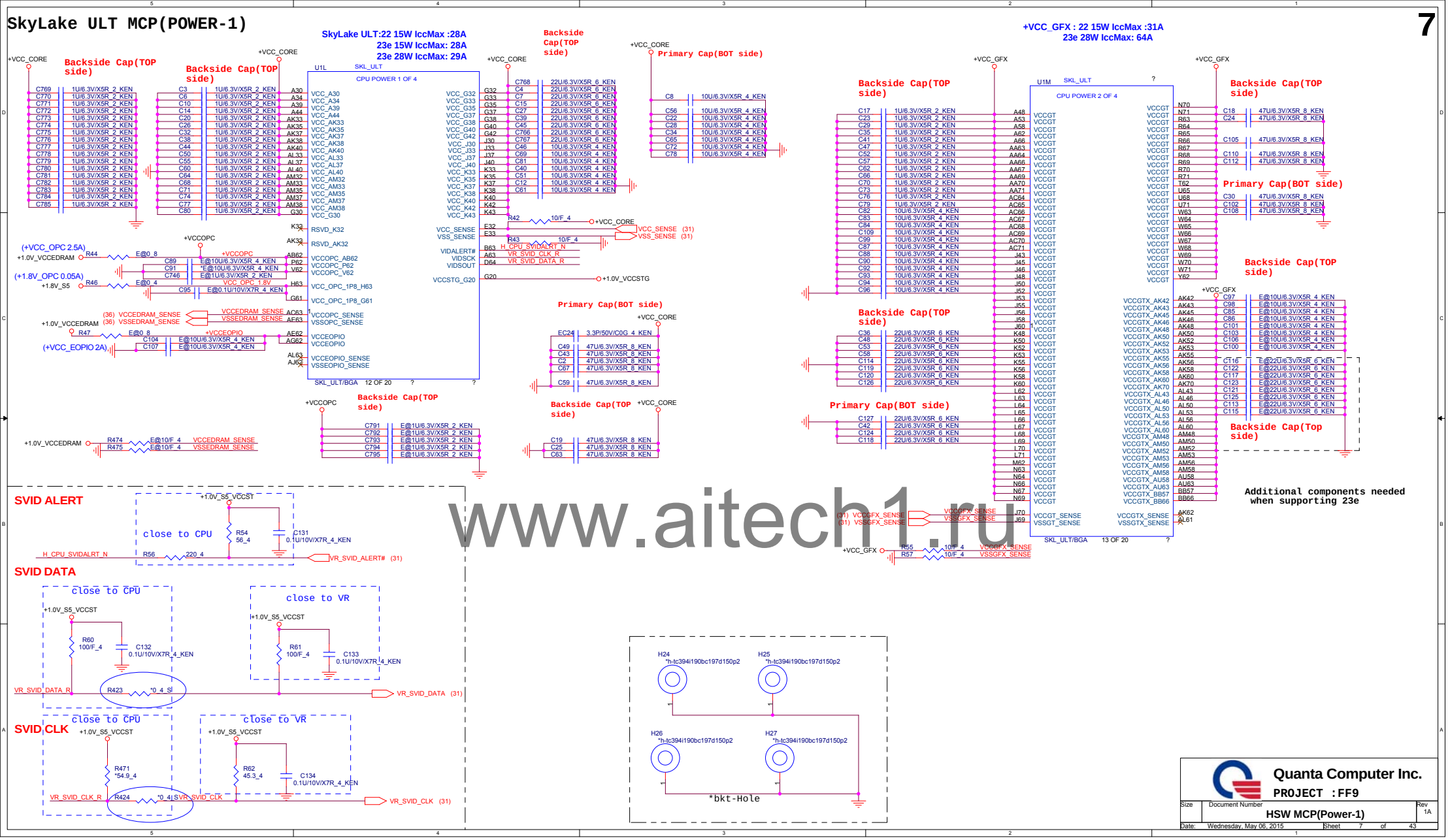

SVID ALERT

SVID DATA

SVID CLK

www.aitech1.ru

Quanta Computer Inc.
PROJECT : FF9

Size	Document Number	Rev
	HSW MCP(Power-1)	1A

Date: Wednesday, May 06, 2015 Sheet 7 of 43

SkyLake ULT MCP(POWER-2)

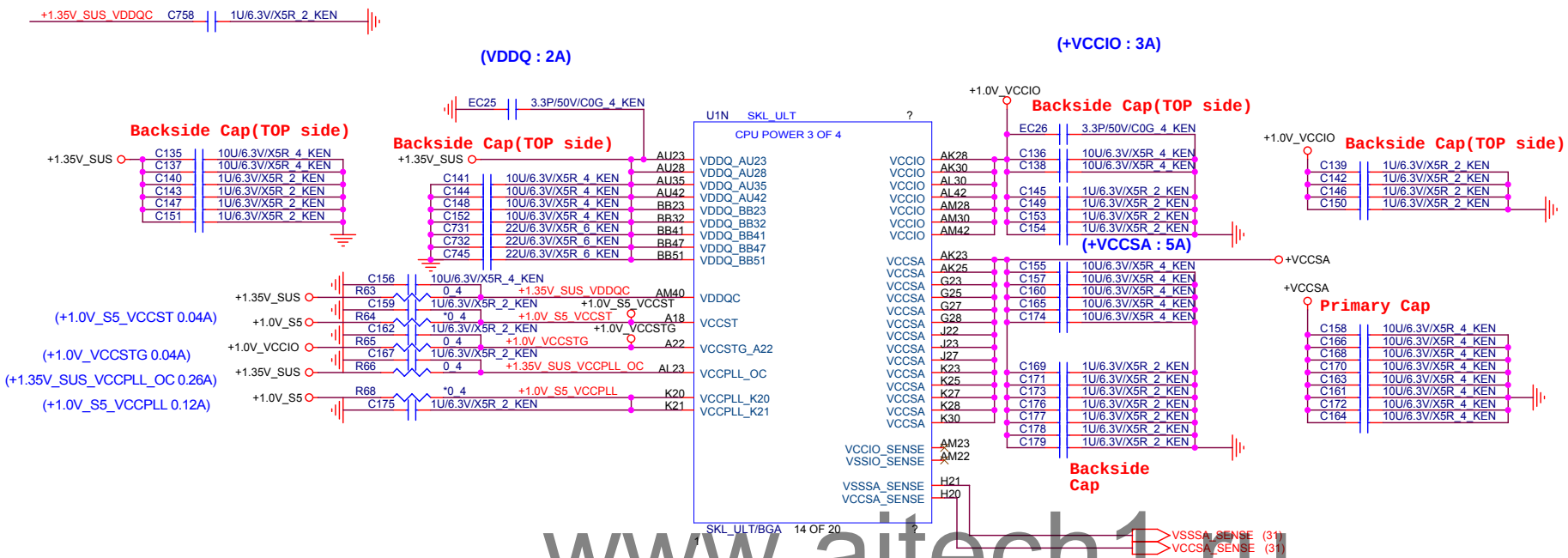

www.aitech1.ru

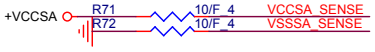

For Debug mode:+1.0V_VCCSTG will use +3V_S5 power rail

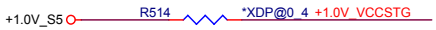

For Load switch <=65usec full load ready

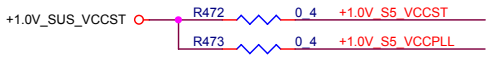

Quanta Computer Inc.		
PROJECT : FF9		
Size	Document Number: HSW PCH(Power-2)	Rev 1A
Date: Wednesday, May 06, 2015	Sheet 8 of 43	

SkyLake ULT (RTC/CLK)

4/21A Change C180 and C181 from 12P to 10P

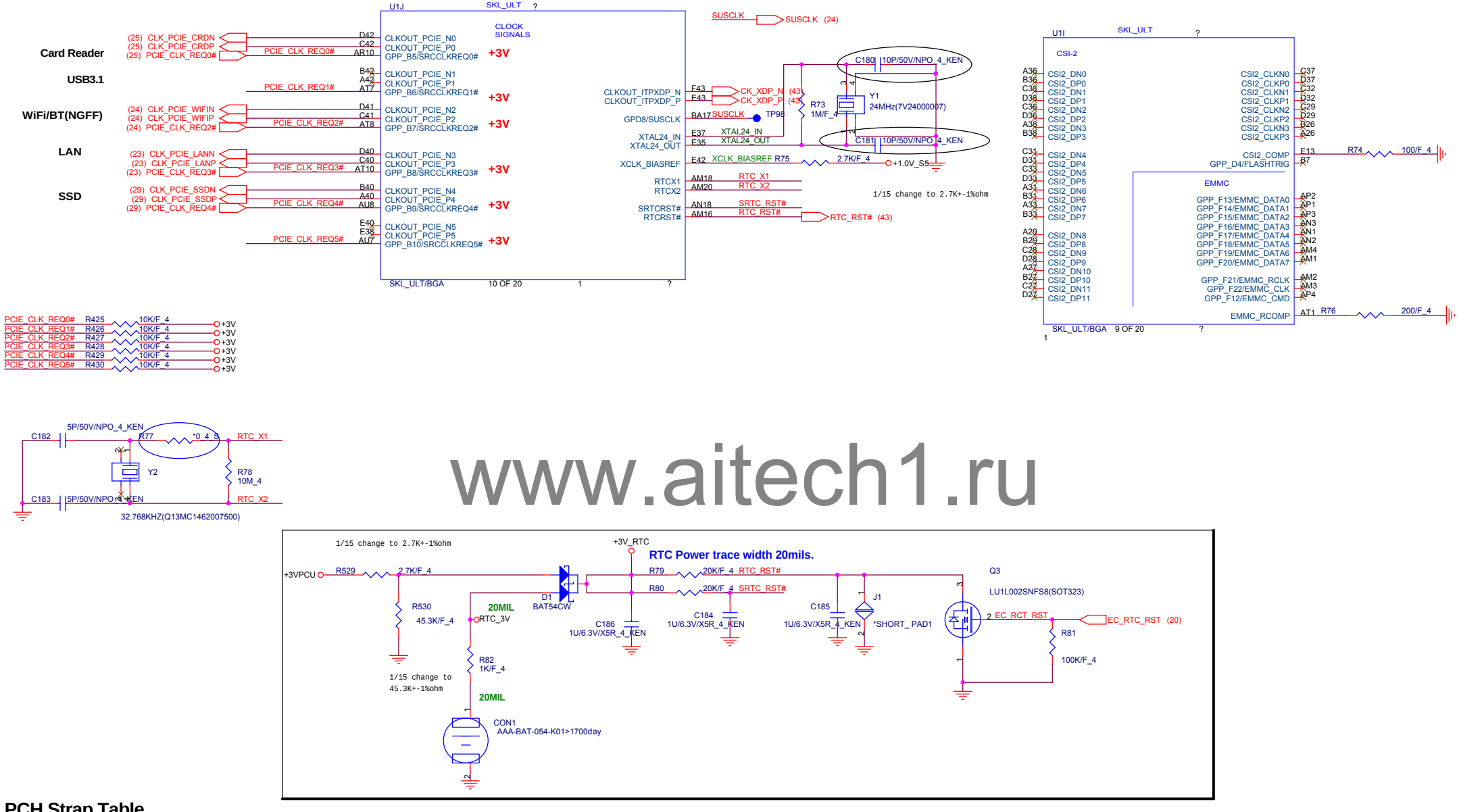

www.aitech1.ru

PCH Strap Table

Pin Name	Strap description	Sampled	Configuration	note
HDA_SDO	Flash Descriptor Security Override / Intel ME Debug Mode	PWROK	0 = Security Effect (Int PD) 1 = Can be Override	+3V_S5 R84 *1K/F_4 ACZ_SDOUT_R ACZ_SDOUT_R (11,20)

Quanta Computer Inc.

PROJECT : FF9

Size	Document Number	Rev
	SKL PCH(RTC/CLK)	1A

Date: Wednesday, May 06, 2015 Sheet 9 of 43

SkyLake ULT (PCIE,USB)

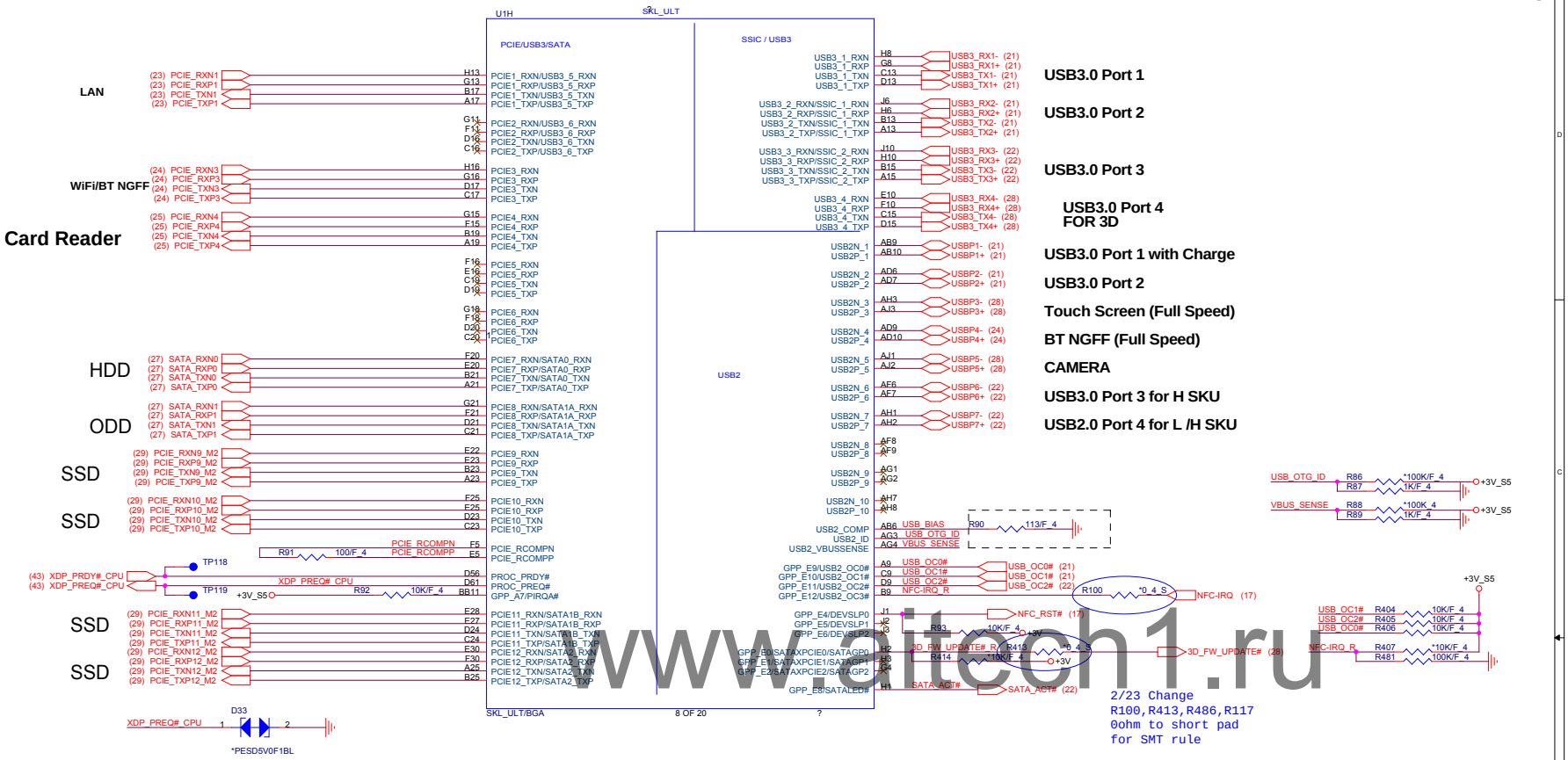

2/23 Change
R100,R413,R486,R117
0ohm to short pad
for SMT rule

www.itech1.ru

SLK ULT (SYSTEM POWER MANAGEMENT)

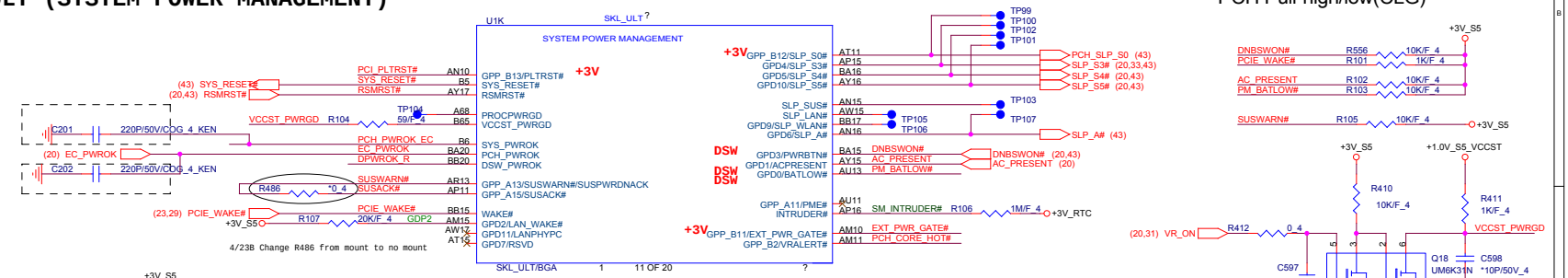

PCH Pull-high/low(CLG)

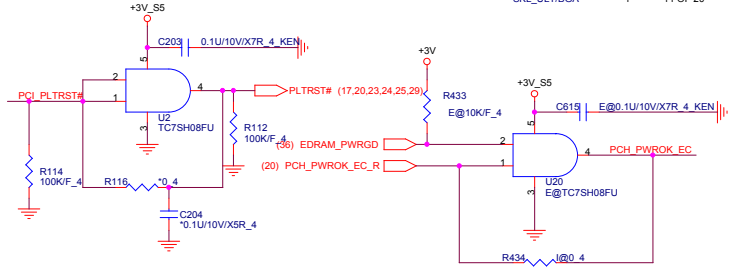

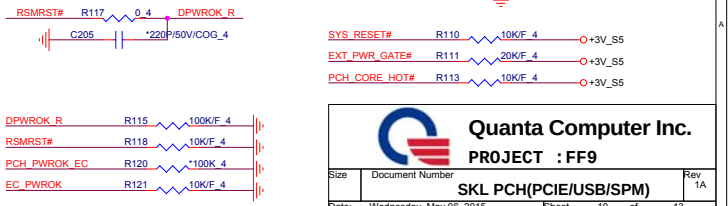

Quanta Computer Inc.
PROJECT : FF9

Size	Document Number	Rev
	SKL PCH(PCIE/USB/SPM)	1A

Date: Wednesday, May 06, 2015 Sheet 10 of 43

SkyLake ULT (HDA/SDXC)

GPPC5: ESPI or LPC SEL
HIGH: ESPI interface
LOW: LPC interface(default)INT DN

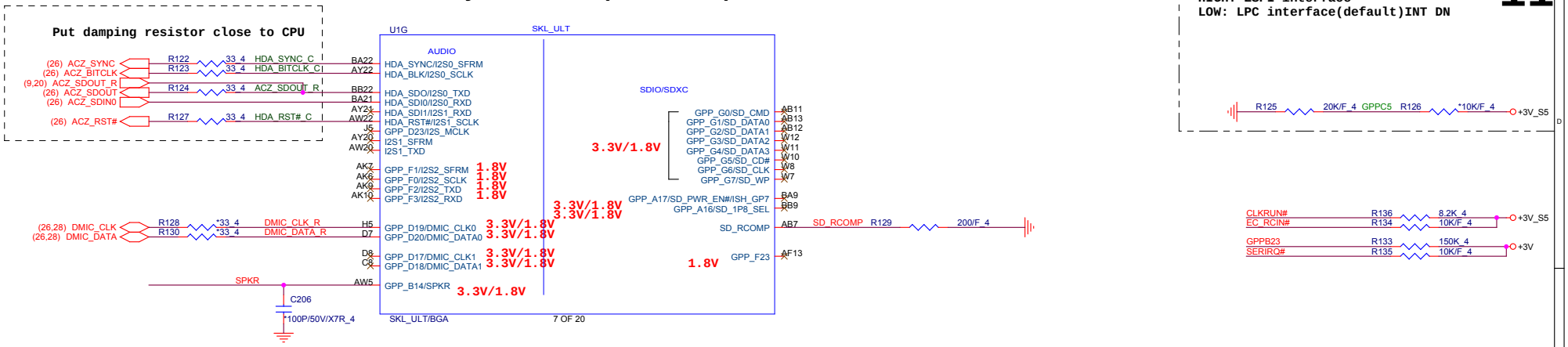

SkyLake ULT (LPC/SPI/SMB/CLINK)

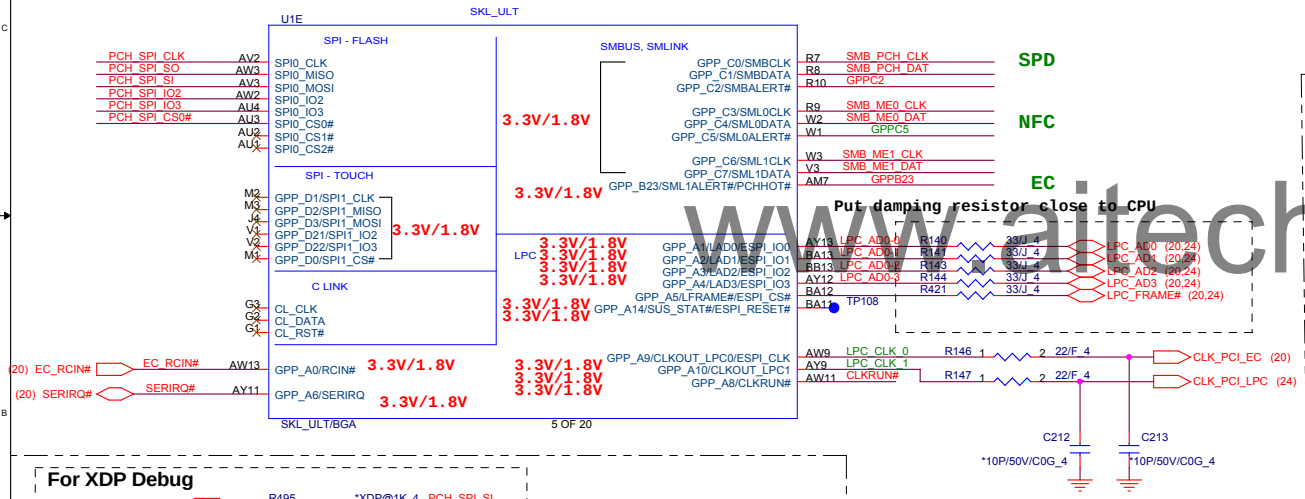

www.ailech1.ru

SMBus/Pull-up(CLG)

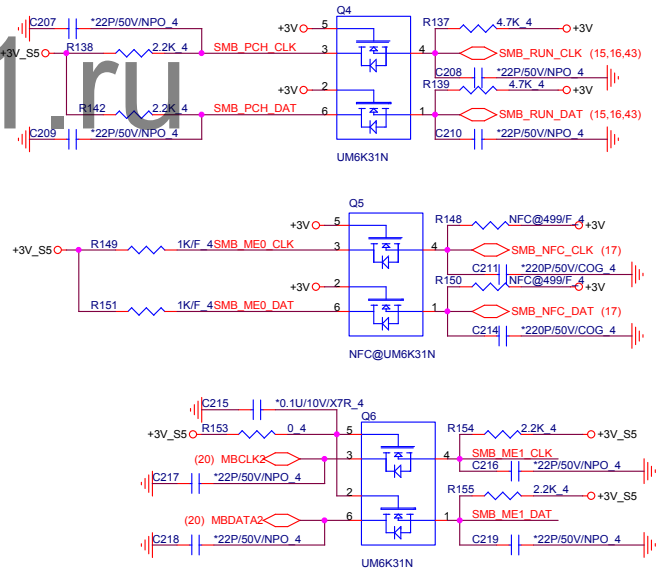

For XDP Debug

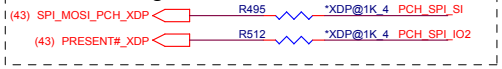

SPI FLASH

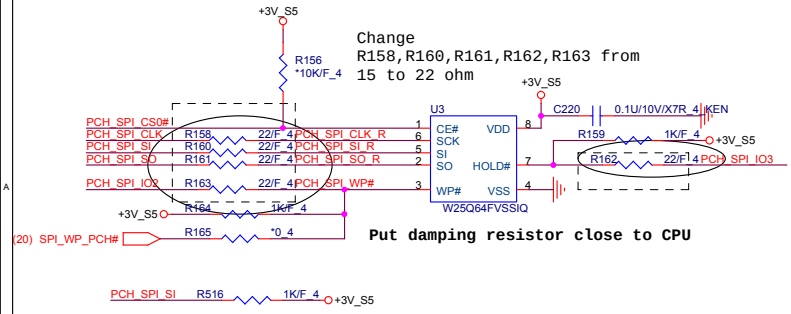

TLS CONFIDENTIALITY STRAP(GPP_C2)	
NC	Default
PU	EN

SPKR/GPP_B14 Top-Block Swap	
PU	Enable
PD	Disable(Default) internal week pull-dpwn

Quanta Computer Inc.

PROJECT : FF9

Size	Document Number	Rev
	SLK PCH(HDA/LPC/SPI/SMB)	1A

Date: Wednesday, May 06, 2015 Sheet 11 of 43

SLK ULT(GPIO,LPIO,MISC)

GPIO Pull-up/Pull-down(CLG)

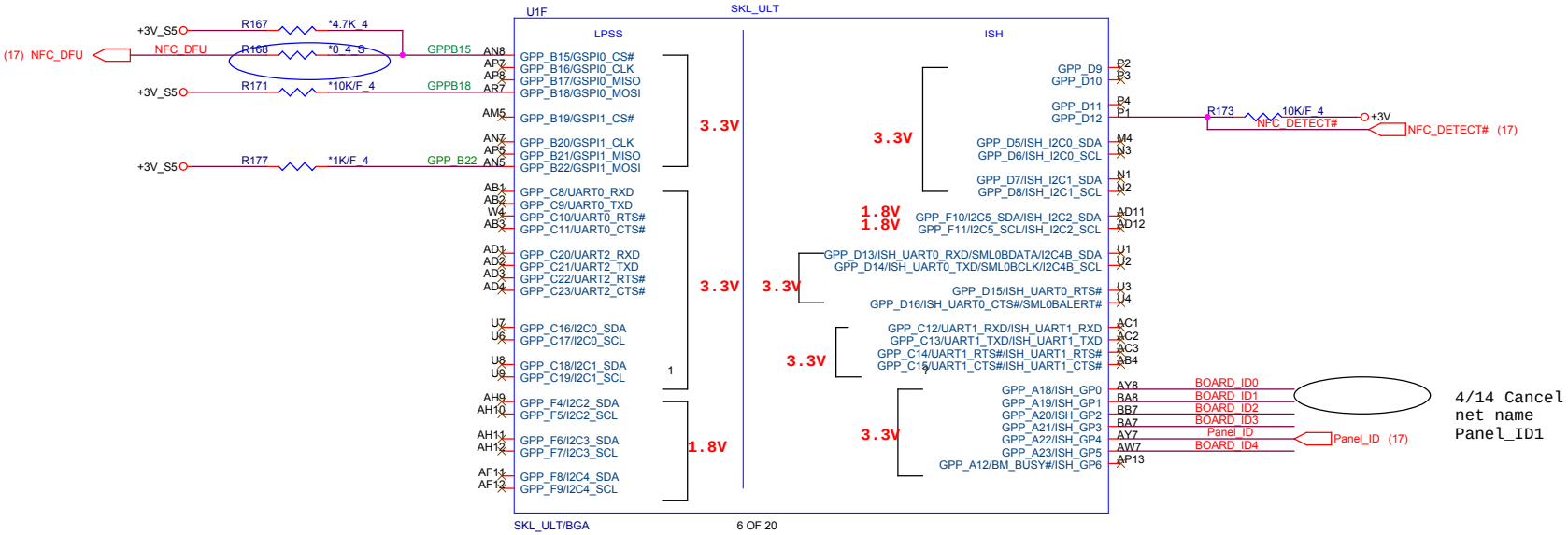

www.aitech1.ru

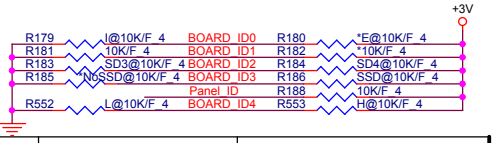

	0	1
Board ID0	SKL GFX GT2	SKL GFX GT3
Board ID1	NA	NA
Board ID2	SD3.0	SD4.0
Board ID3	No support	PCIE to SSD
Panel ID	Other LCD	4K2K Panel
Board ID4	L-SKU for No Bland speaker	H-SKU for YAMAHA speaker

GPP_B22(Boot BIOS)	
PU	LPC
PD	SPI (Default IPD)

No Reboot Strap(GPP_B18)	
NC	Default
PU	EN

Quanta Computer Inc.

PROJECT :FF9

Size	Document Number	Rev
	SKL PCH(GPIO/UART/I2S)	1A

Date: Wednesday, May 06, 2015 Sheet 12 of 43

3/5 Change C229 from 0.1U to 1U for Intel request

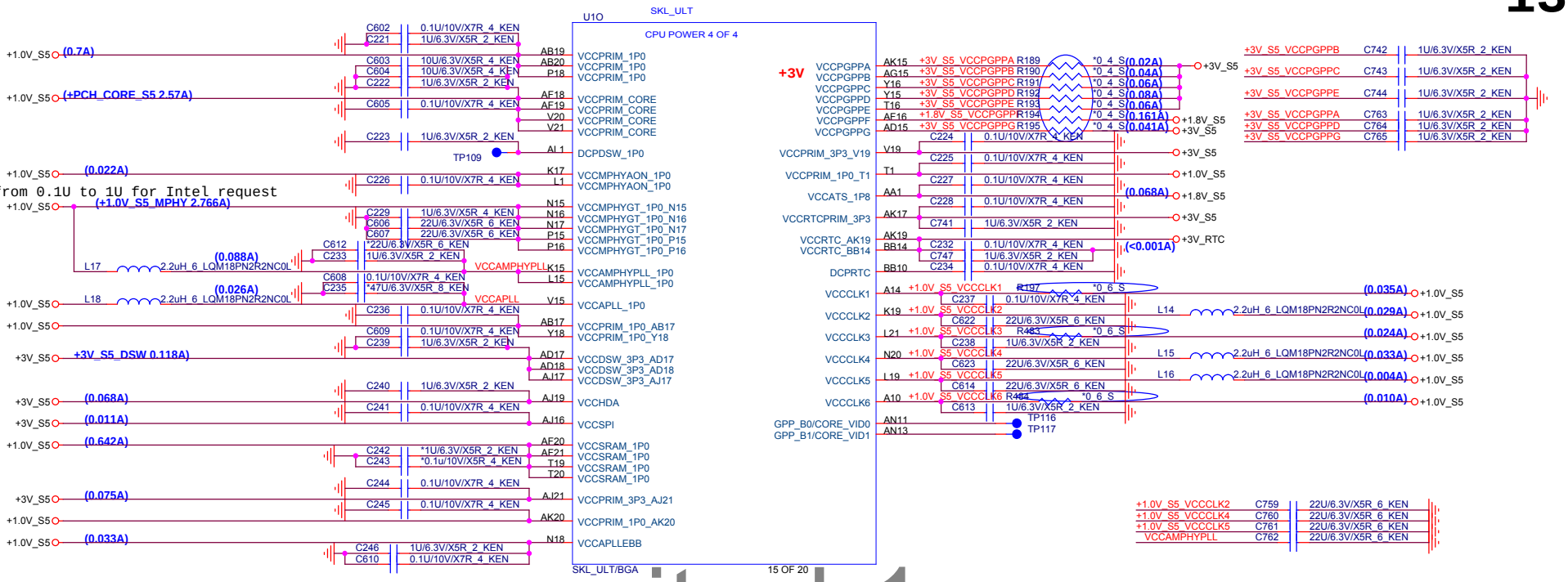

www.aitech1.ru

Quanta Computer Inc.

PROJECT : FF9

Size	Document Number	Rev
	SKL PCH(Power)	1A

Date: Wednesday, May 06, 2015 Sheet 13 of 43

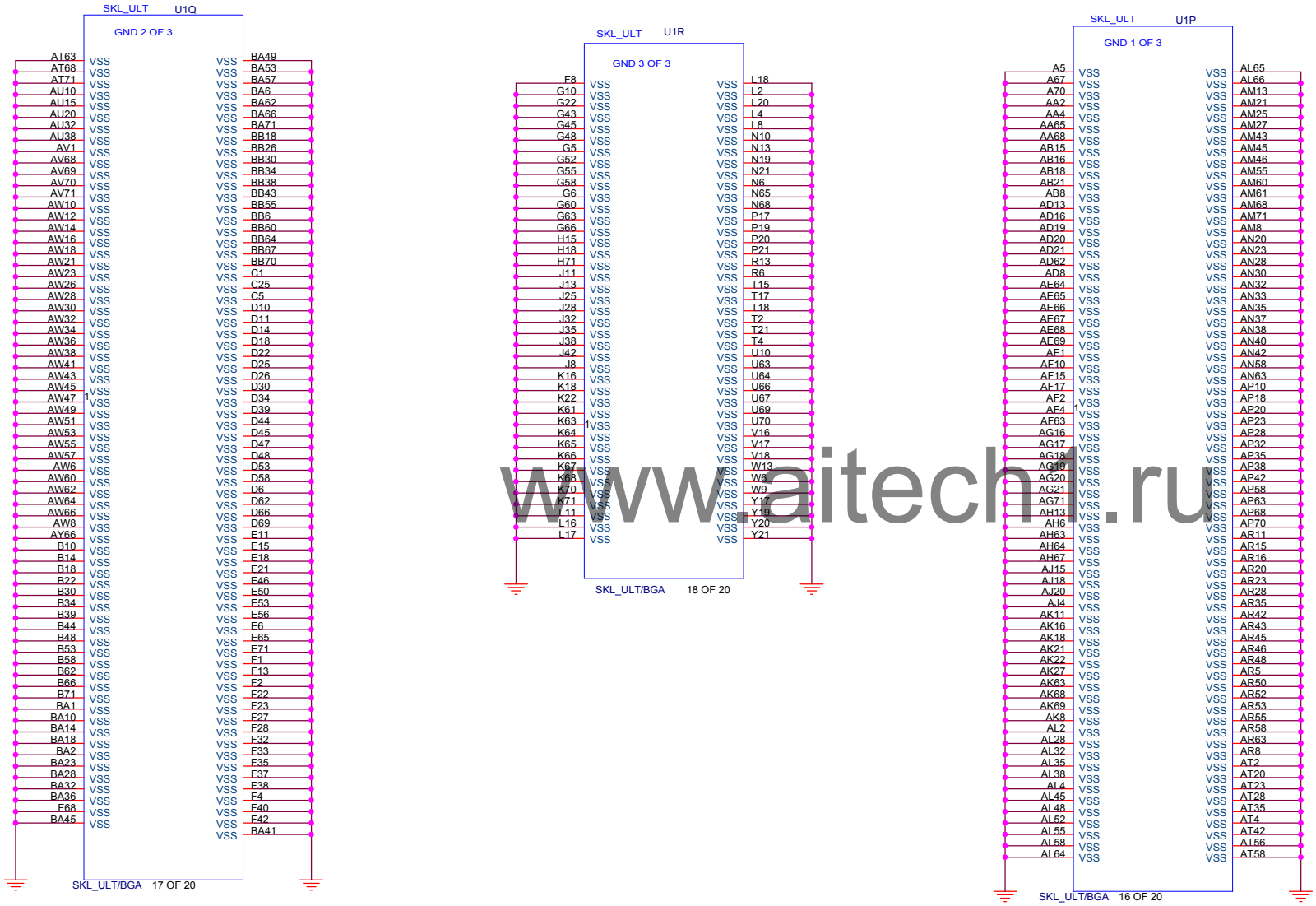

www.aitech.ru

Quanta Computer Inc.

PROJECT : FF9

Size	Document Number	Rev
	SKL PCH(GND)	1A

Date: Wednesday, May 06, 2015 Sheet 14 of 43

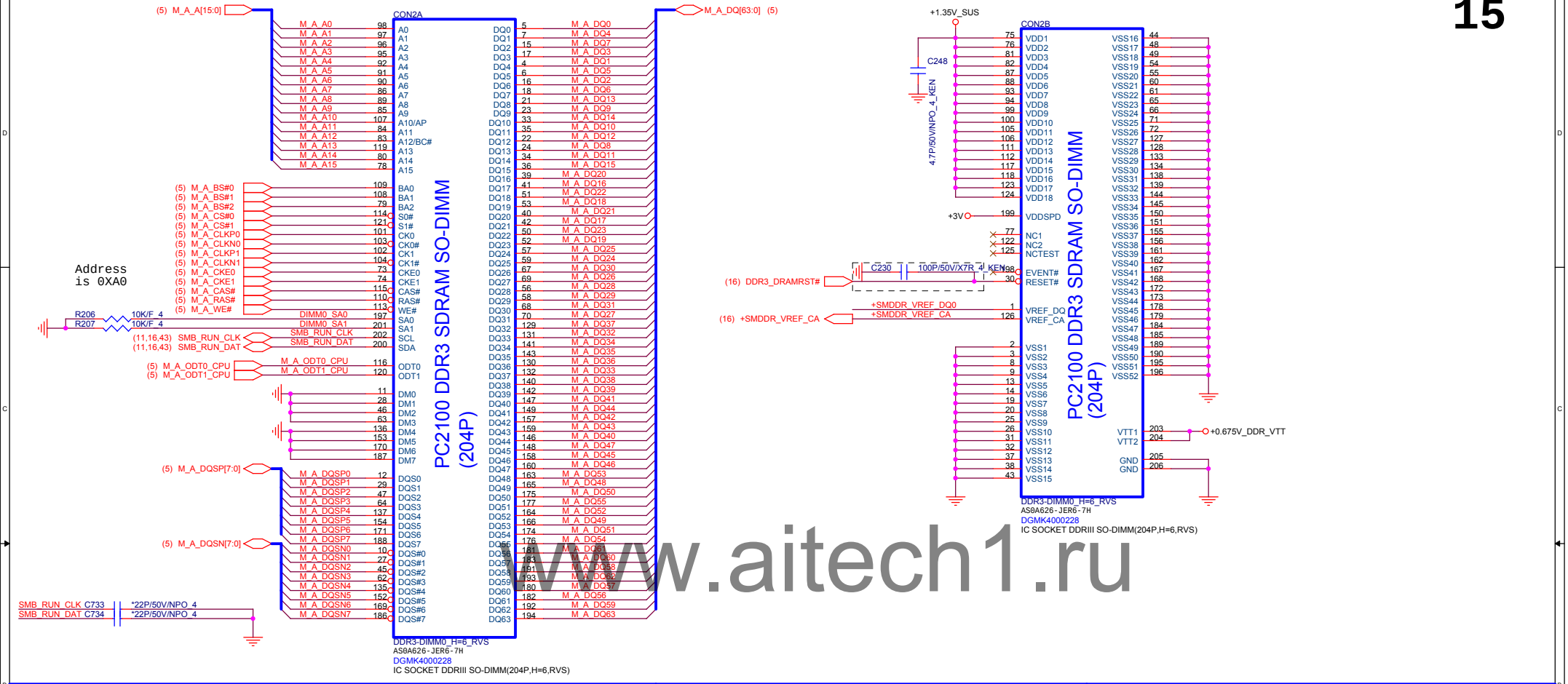

www.aitech1.ru

DDR3L SODIMM ODT GENERATION

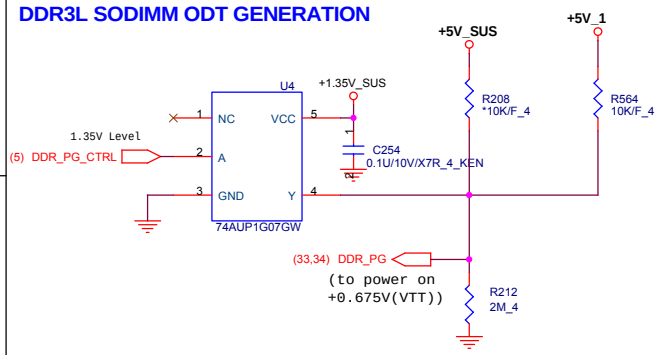

Change C259,C261,C262,C264,C267 ,C269,C270,C272,C274,C258,C260 SIZE
to 0402 for ME team request

Place these Caps near So-Dimm0.

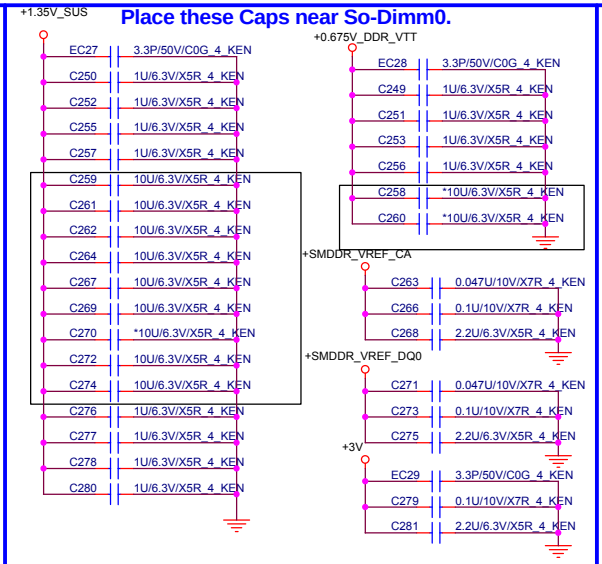

VREF DQ0 M1/M3 Solution

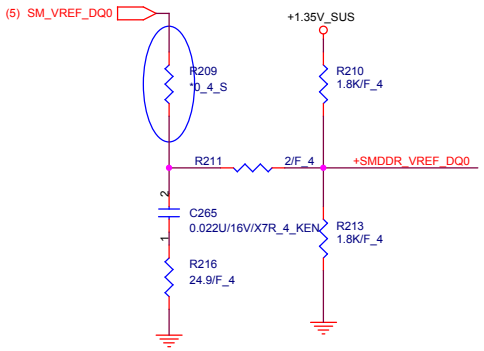

Quanta Computer Inc.

PROJECT : FF9

Size	Document Number	Rev
	DDR3 DIMM0	1A

Date: Wednesday, May 06, 2015 Sheet 15 of 43

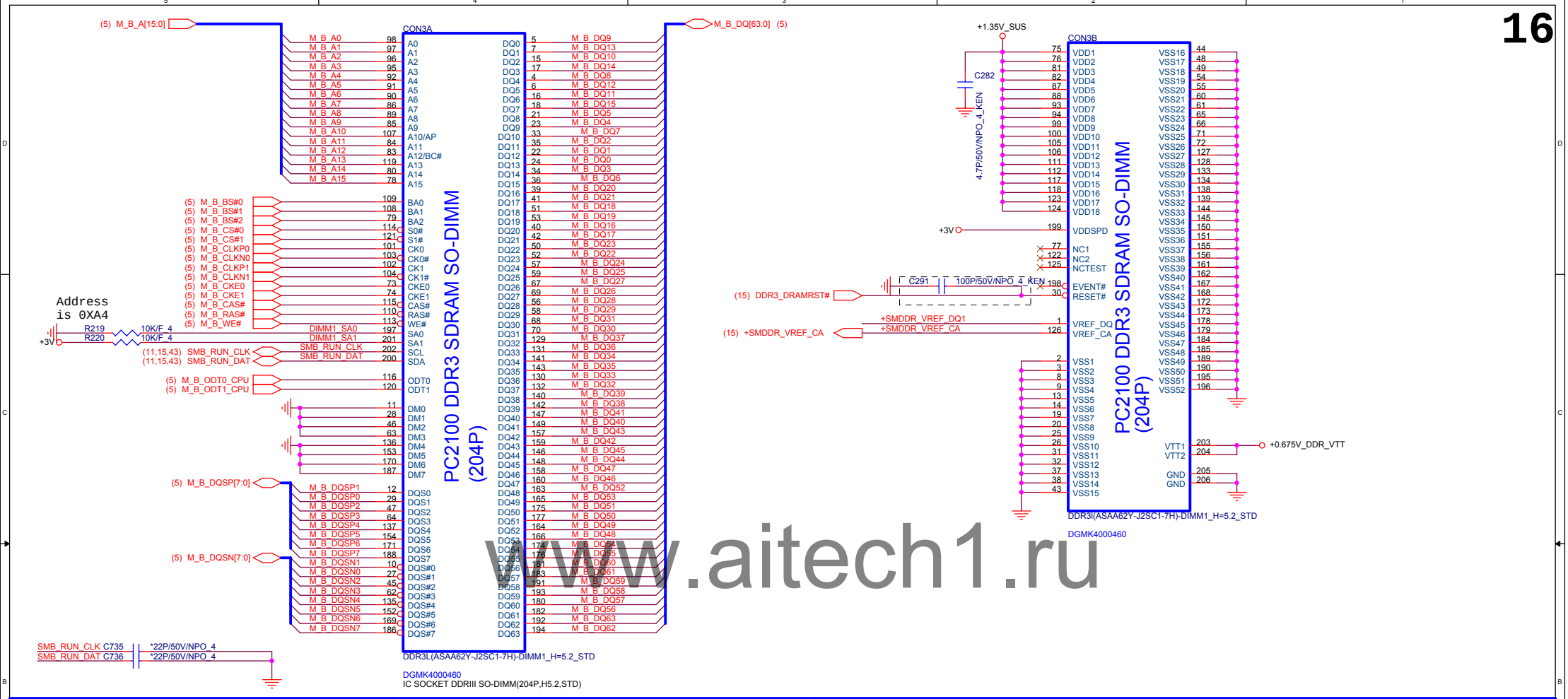

www.aitech1.ru

SYL ULT DRAMRST#

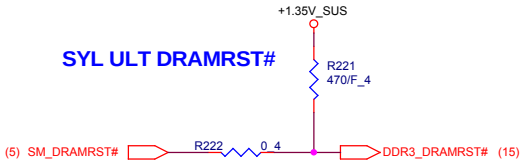

Change C292,C294,C296,C297, C298,C301,C304,C306,C307, C293,C295 SIZE to 0402 for ME team request

Place these Caps near So-Dimm1

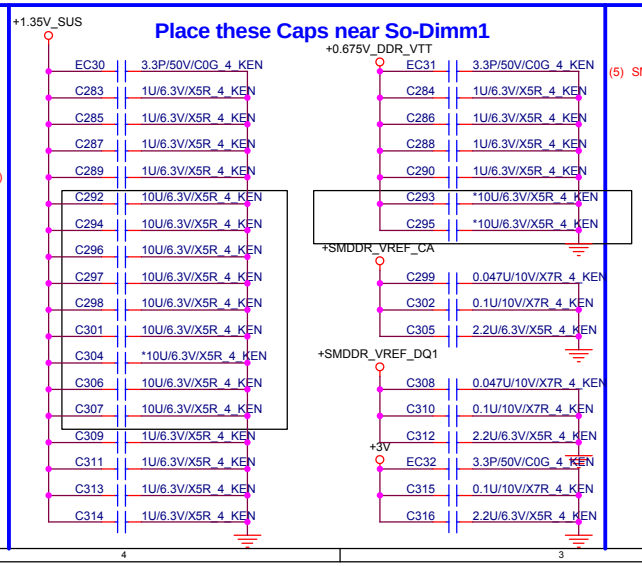

VREF DQ1 Solution

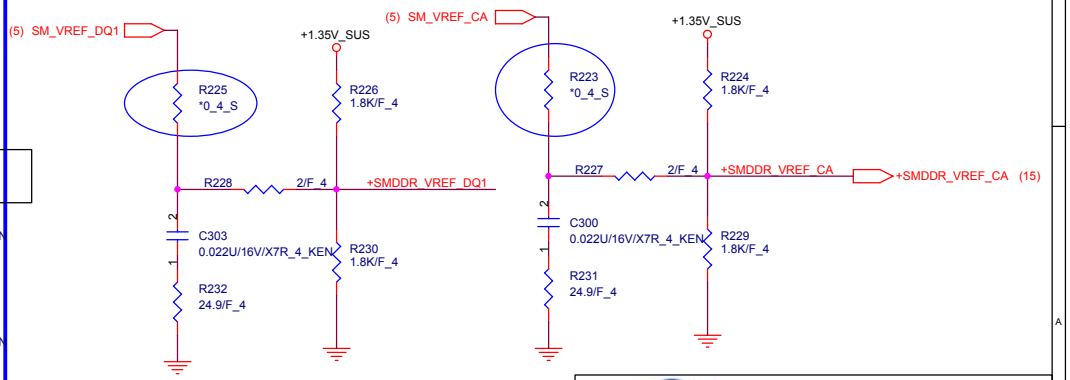

Quanta Computer Inc.

PROJECT : FF9

Size	Document Number	Rev
	DDR3 DIMM1	1A
Date: Wednesday, May 06, 2015	Sheet 16 of 43	

eDP

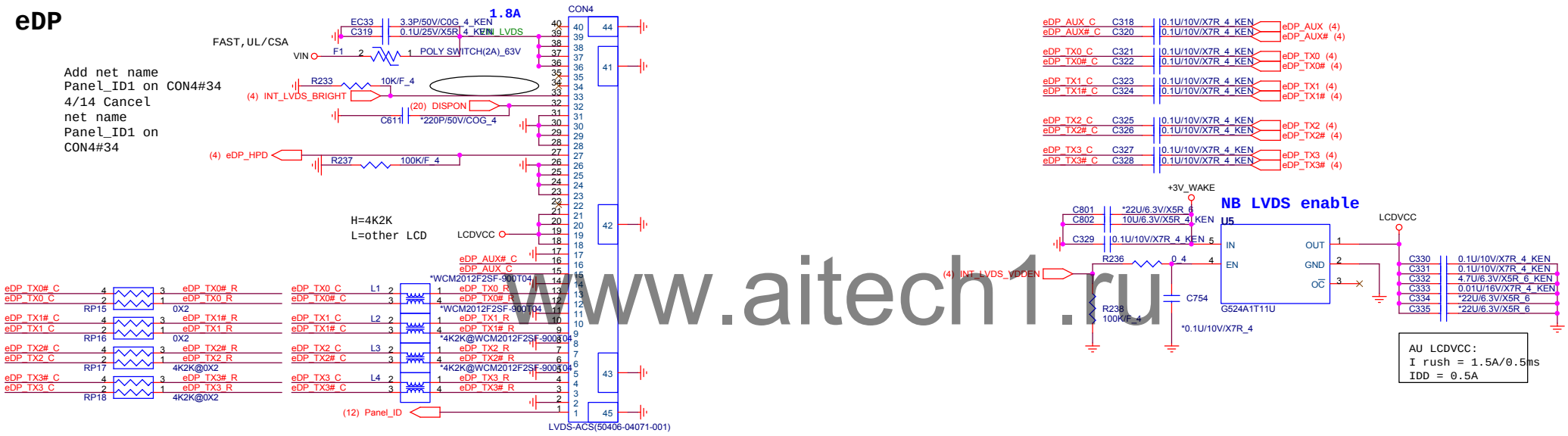

www.aitech1.ru

NFC

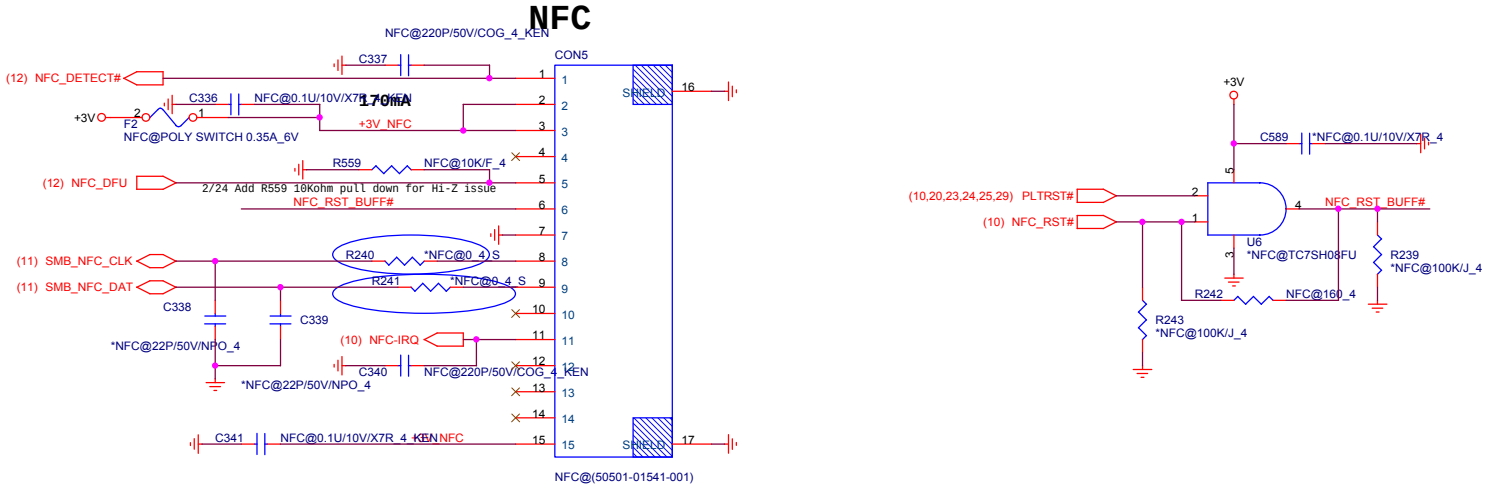

Quanta Computer Inc.			
PROJECT : FF9			
Size	Document Number		Rev
	LVDS/NFC		1A
Date: Wednesday, May 06, 2015	Sheet 17 of 43		

HDMI

DDI Disabling Strapping

	Strap	Enable
Port 1	INT_HDMI_SDA	Pull up to 3.3V with 2.2K

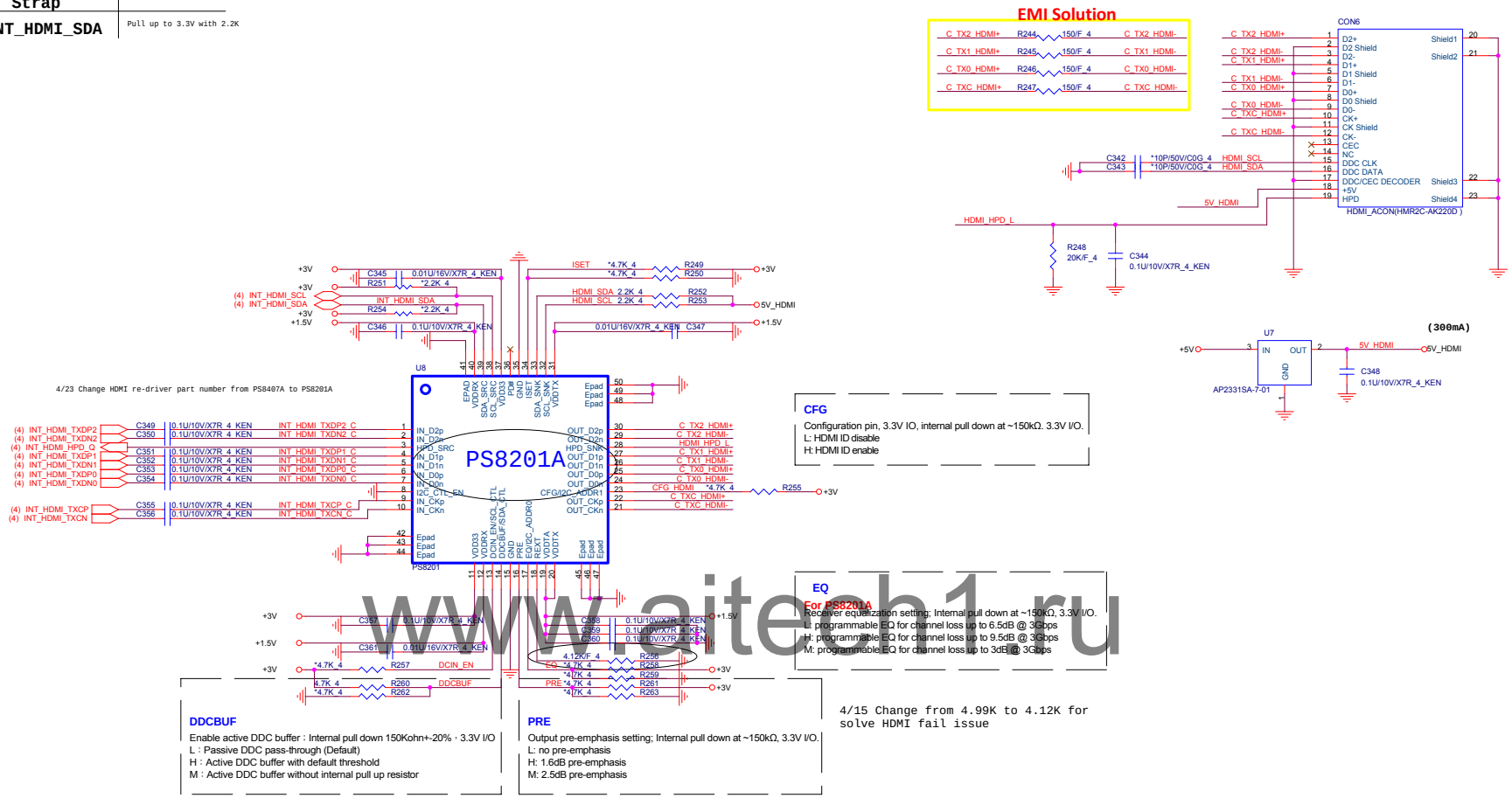

www.aitech1.ru

HOLE

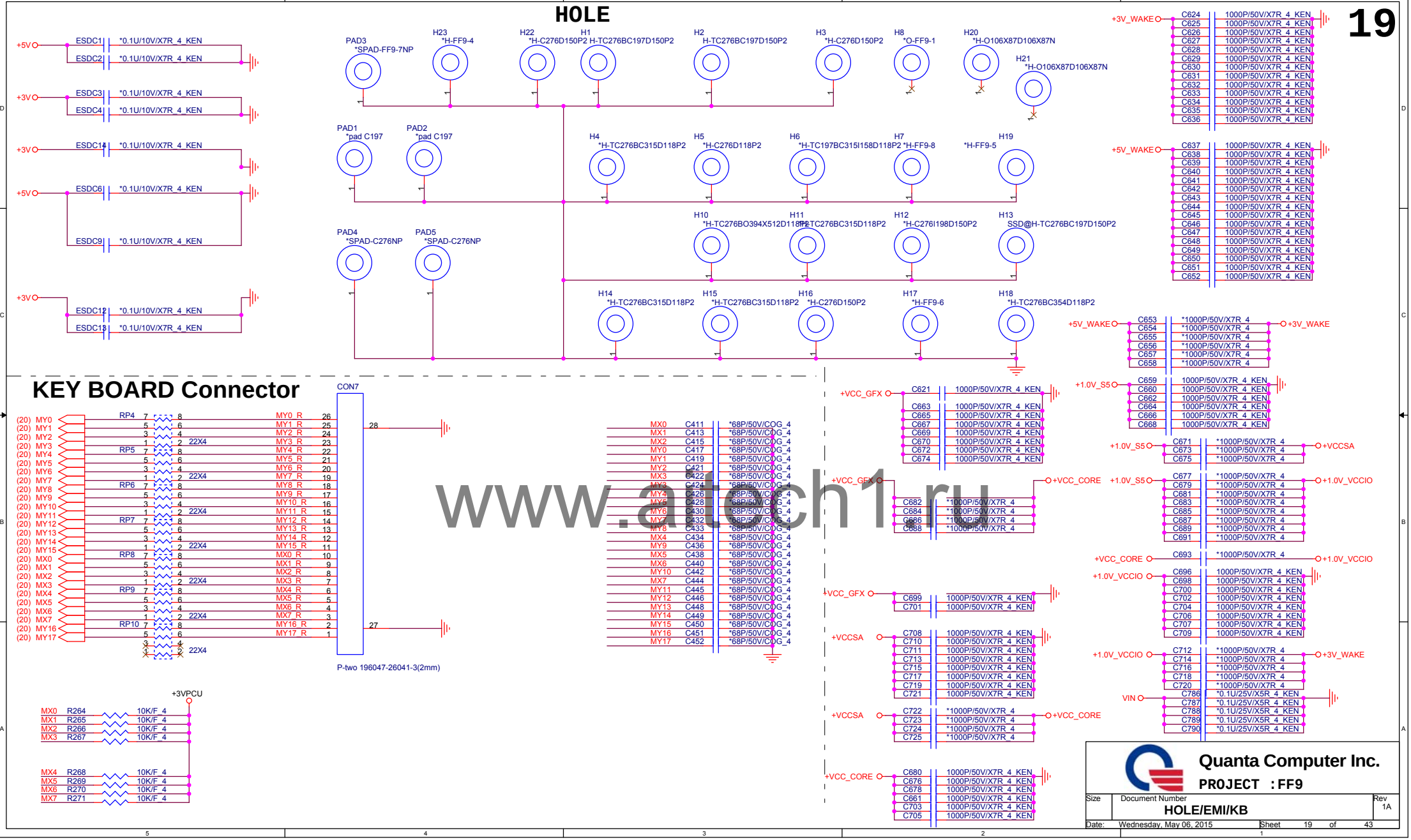

www.alcch1.ru

Quanta Computer Inc.

PROJECT : FF9

Size	Document Number	Rev
	HOLE/EMI/KB	1A

Date: Wednesday, May 06, 2015 Sheet 19 of 43

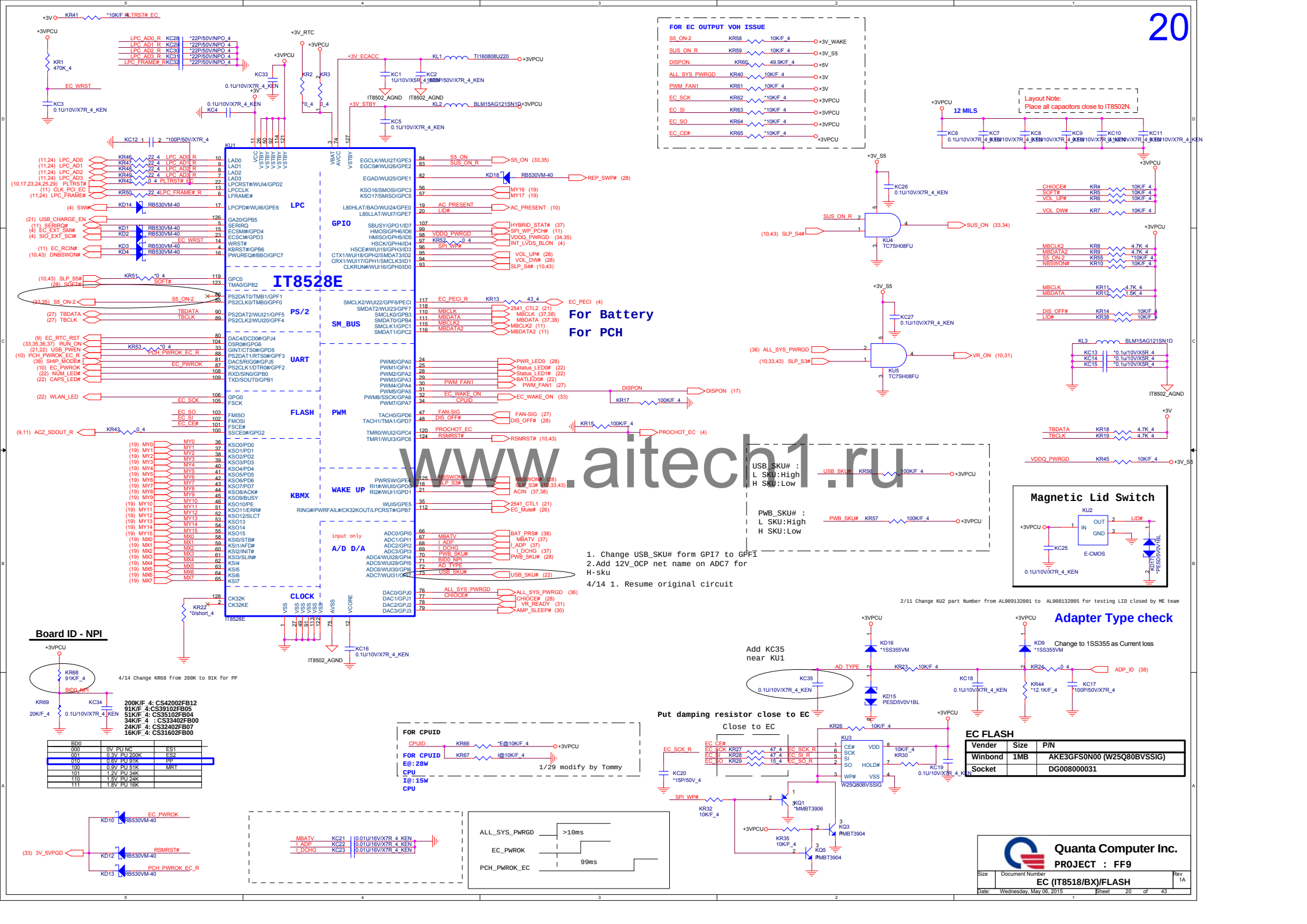

www.aitech1.ru

USB 3.0 PORT1

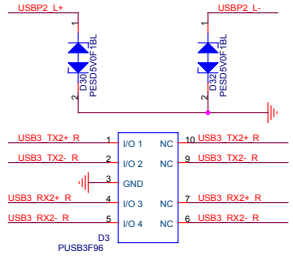

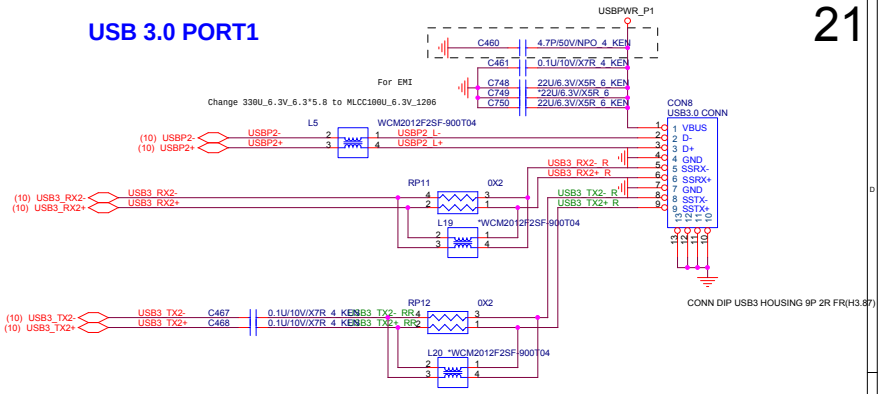

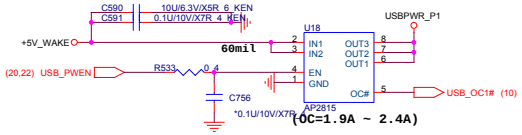

	TPS2541		
ILIM_SEL	Pin15	Pin16	
High	V		
Low		V	

SDP : Standard Downstream Port
CDP : Charging downstream port
DCP : Dedicated Charging Port
Enable/Disable : setting by EC

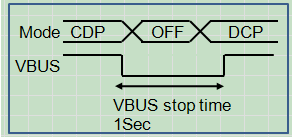

ILIM_SEL	(I LIMIT(A)= 48000/R)	
HI	I_LIM_1	
LO	I_LIM_0	48000/22.6K=2.123A

USB Charger

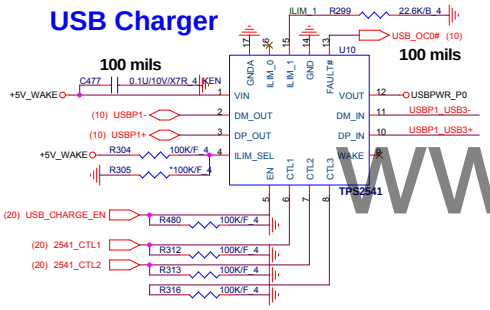

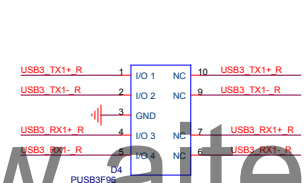

USB 3.0 PORT0

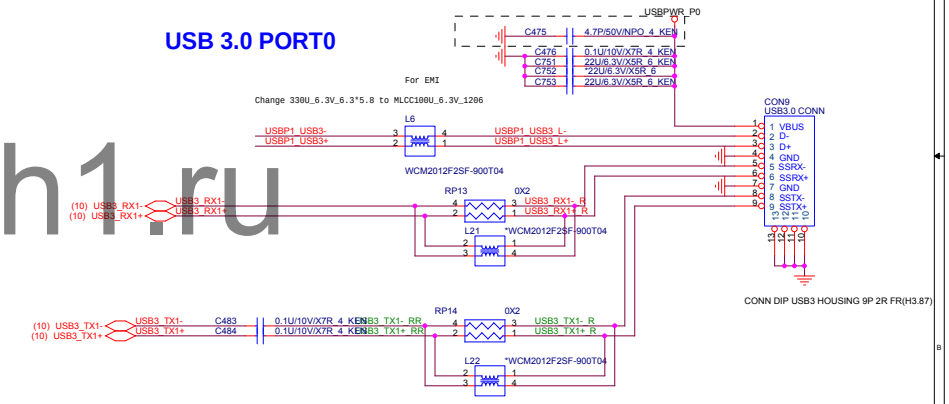

www.altech1.ru

USB_CHARGER_EN	CTL_1	CTL_2	CTL_3	TPS 2541 Truth Table
1	0	0	X	DCP,Auto-detect(S3/S4/S5, 1.5A)
1	0	1	X	DCP, BC SPEC1.2 only(S3/Deep standby/S4/S5, 1.5A)
1	1	0	X	DCP, Divider mode only(S3/S4/S5, 1.5A)
1	1	1	0	SDP, USB2.0 mode(S0, 0.5A)
1	1	1	1	CDP (S0, 1.5A)
0	X	X	X	OUT discharge, power switch OFF

System State	USB Battery Charging Setting		
	Disable(AC and DC mode)(EN 1 2 3)	Enable(AC mode) (EN 1 2 3)	Enable(DC mode)(EN 1 2 3)
S0	SDP (1 1 1 0)	SDP (1 1 1 0)	SDP (1 1 1 0)
S3	SDP (1 1 1 0)	DCP Auto (1 0 0 X)	Charger OFF (0 X X X)
DS3	Charger OFF (0 X X X)	DCP Auto (1 0 0 X)	Charger OFF (0 X X X)
S4	Charger OFF (0 X X X)	DCP Auto (1 0 0 X)	Charger OFF (0 X X X)
S5	Charger OFF (0 X X X)	DCP Auto (1 0 0 X)	Charger OFF (0 X X X)

Quanta Computer Inc.
PROJECT : FF9

Size	Document Number	Rev
	USB/USB Charger	1A

Date: Wednesday, May 06, 2015 Sheet 21 of 43

MB to USB board

FFC CONN

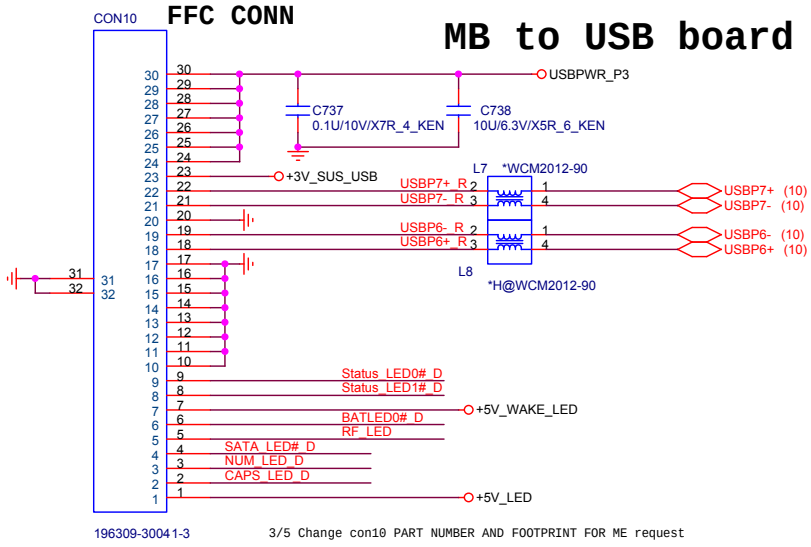

3/5 Change con10 PART NUMBER AND FOOTPRINT FOR ME request

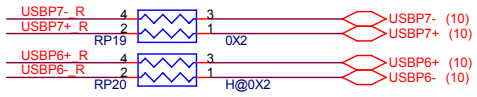

FPC CONN

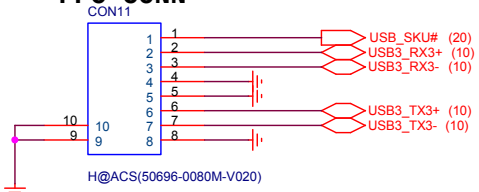

USB board :
L SKU:High
H SKU:Low

SATA LED

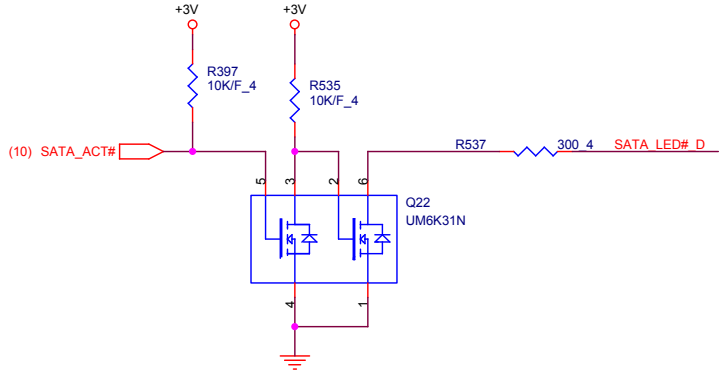

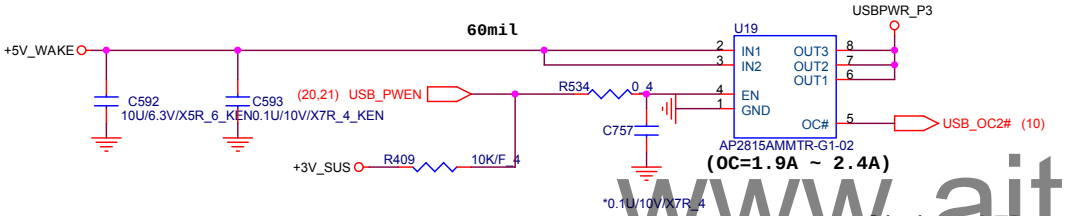

www.aitech1.ru

WLAN LED

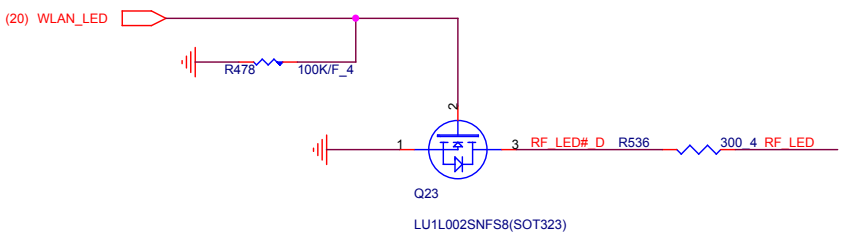

Status LED
(White(LED0)/Amber(LED1))

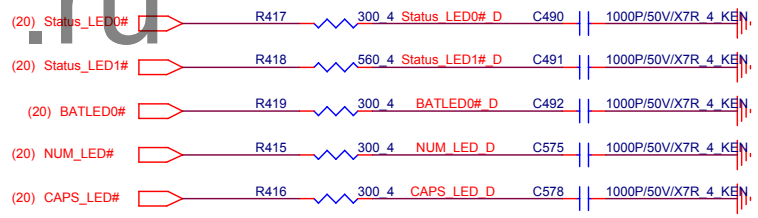

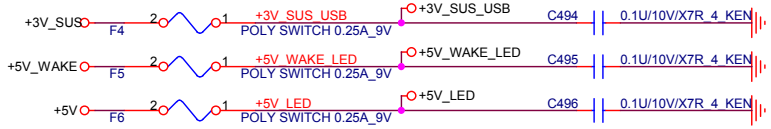

Quanta Computer Inc.
PROJECT : FF9

Size	Document Number	Rev
	MB TO USB	1A

Date: Wednesday, May 06, 2015 Sheet 22 of 43

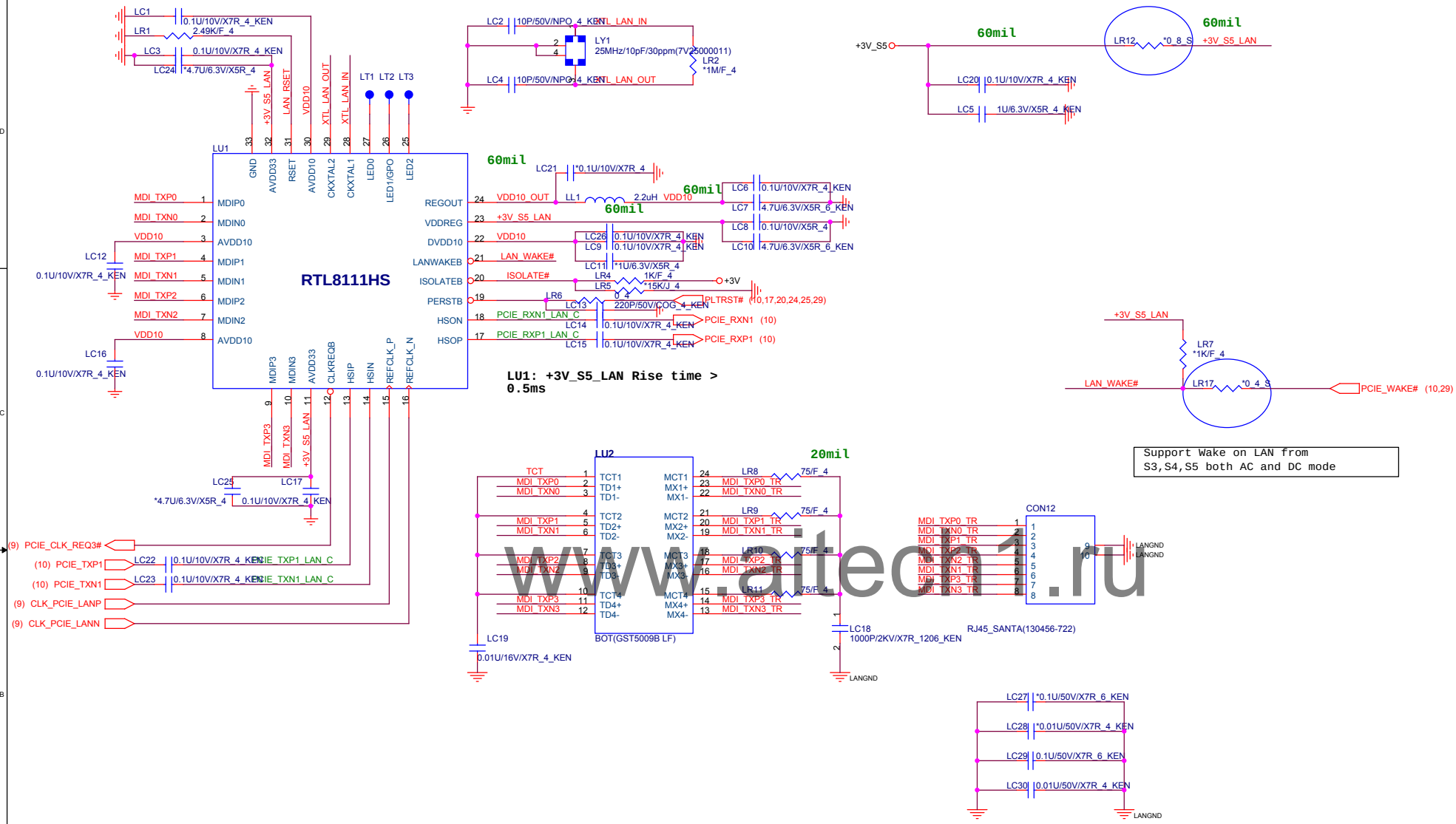

www.aitech1.ru

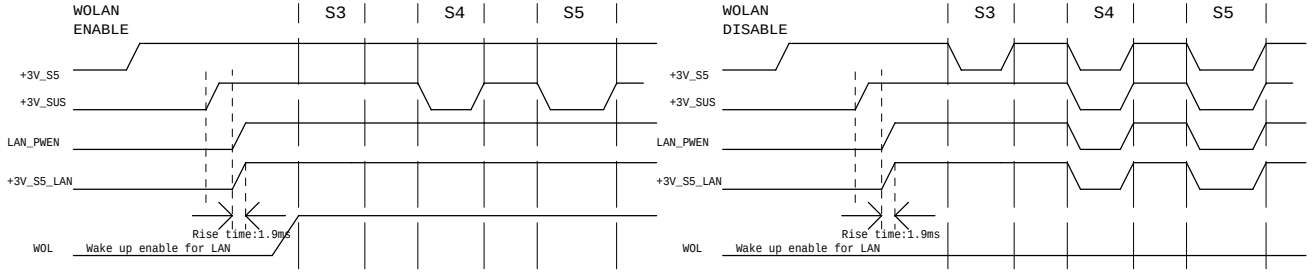

BIOS Setup	WOLAN DISABLE		WOLAN ENABLE	
	LAN_PWEN	WOL	LAN_PWEN	WOL
S3	H	H	H	H
S4	L	L	H	H
S5	L	L	H	H

Quanta Computer Inc.

PROJECT : FF9

Size	Document Number	Rev
	Giga LAN RTL8111HS	1A

Date: Wednesday, May 06, 2015 Sheet 23 of 43

NGFF Wifi/BT

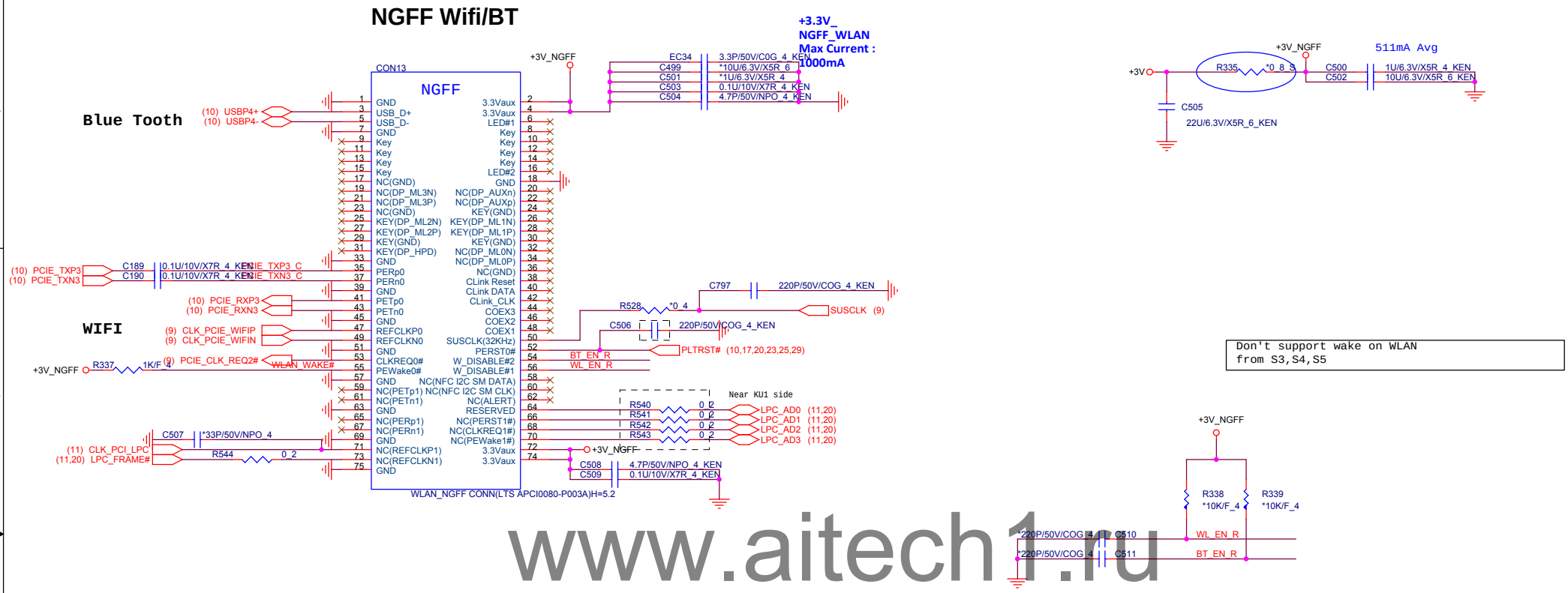

Don't support wake on WLAN
from S3,S4,S5

www.aitech1.ru

Quanta Computer Inc.

PROJECT : FF9

Size	Document Number	Rev
	WLAN	1A

Date: Wednesday, May 06, 2015 Sheet 24 of 43

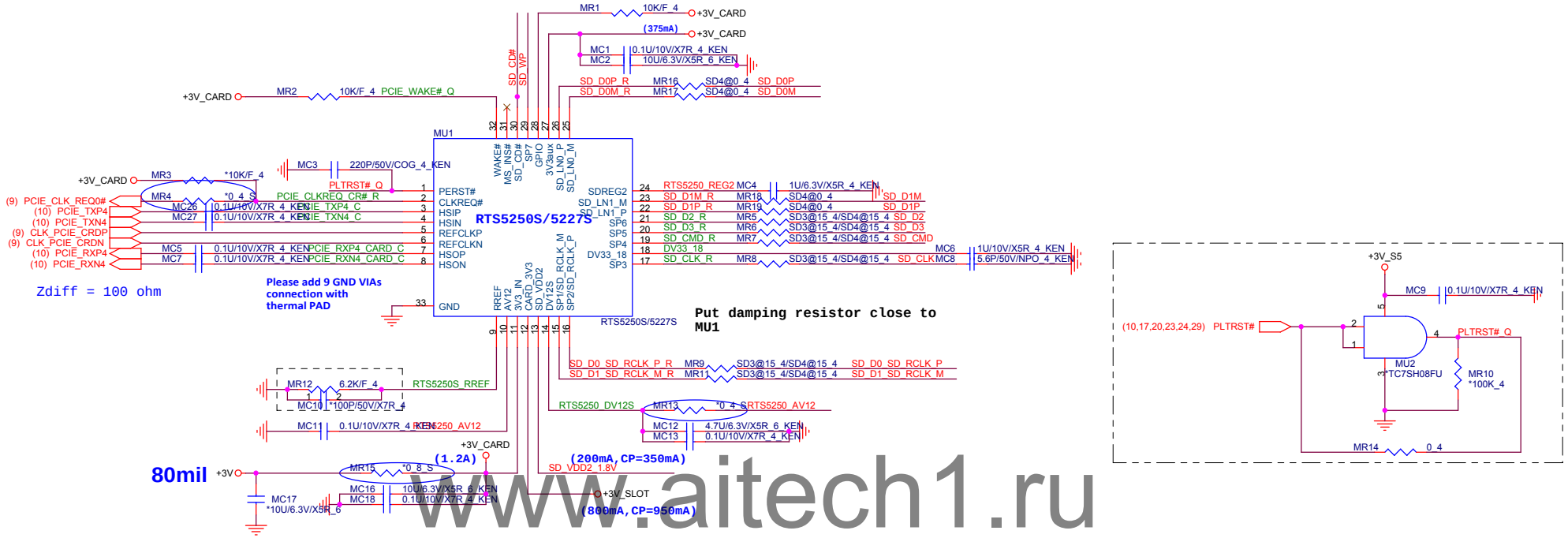

www.aitech1.ru

SD 4.0 Connector

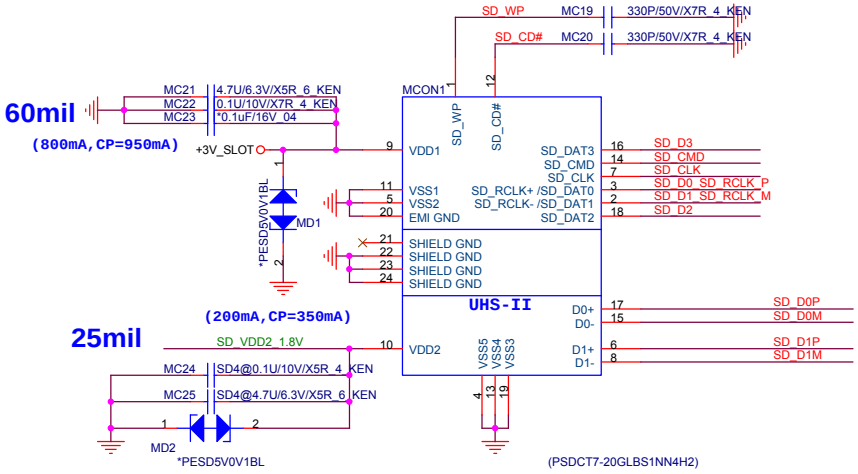

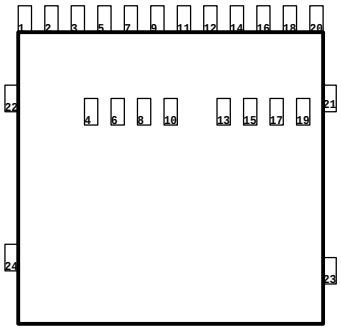

Quanta Computer Inc.

PROJECT : FF9

Size	Document Number	Rev
	CR RTS5250S & CR SOCKET	1A

Date: Wednesday, May 06, 2015 Sheet 25 of 43

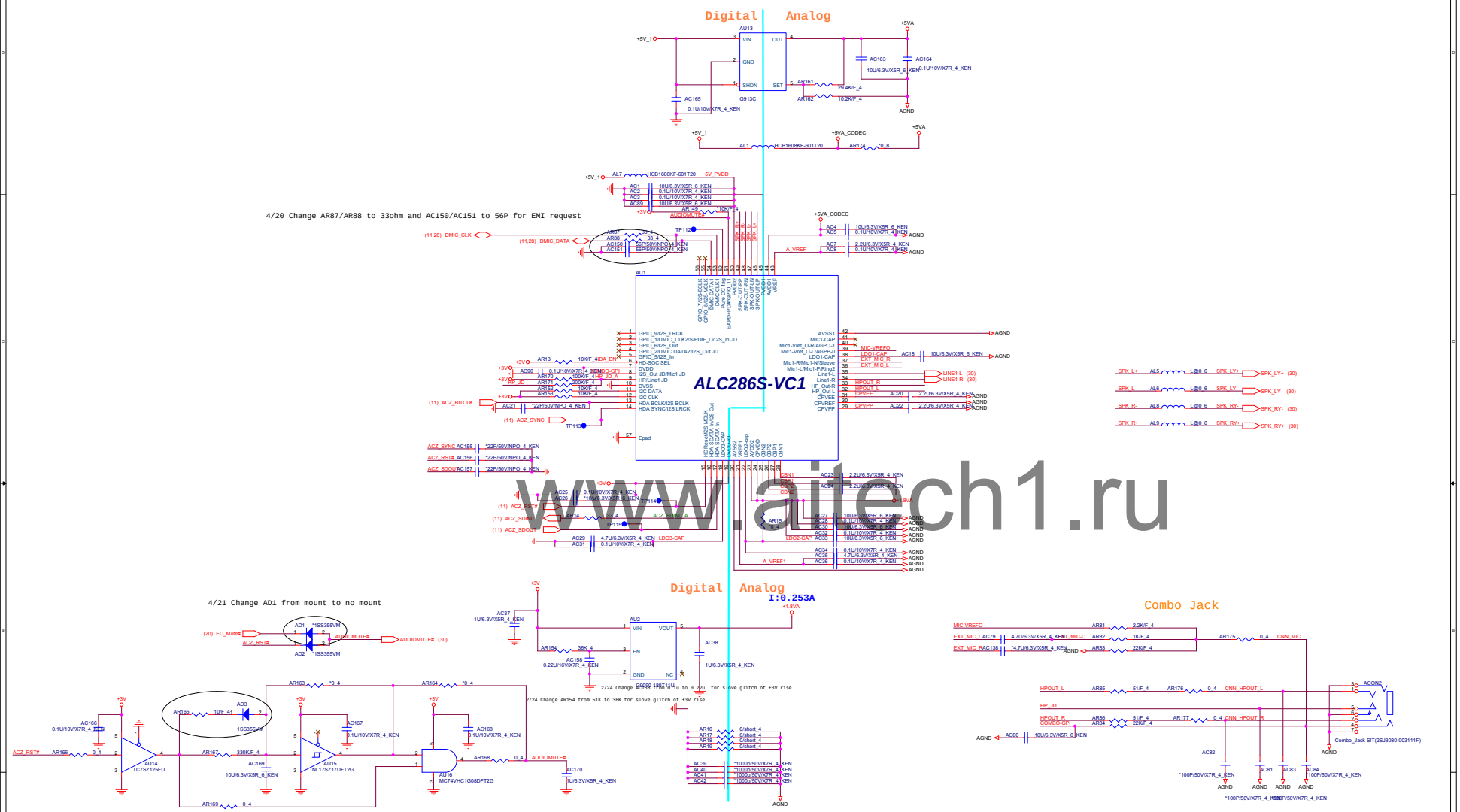

www.altech1.ru

Quanta Computer Inc.
PROJECT : FF9
Audio Codec ALC286S-CG
Size | Document Number | Rev 1A
Date: Wednesday, May 06, 2015 | Sheet 26 of 43

ODD CONNECTOR

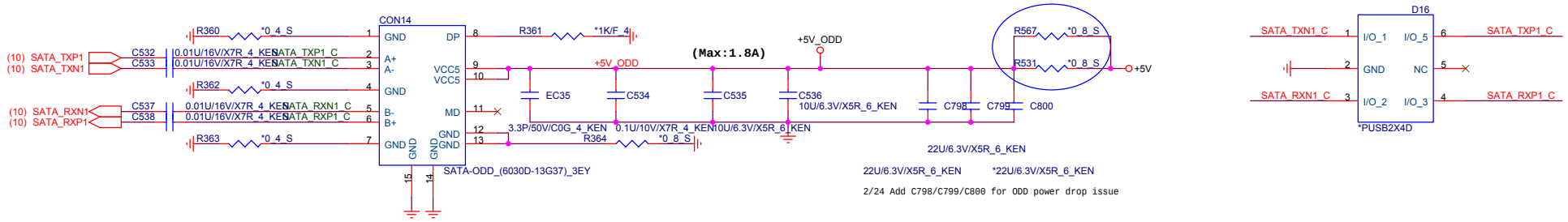

HDD CONNECTOR

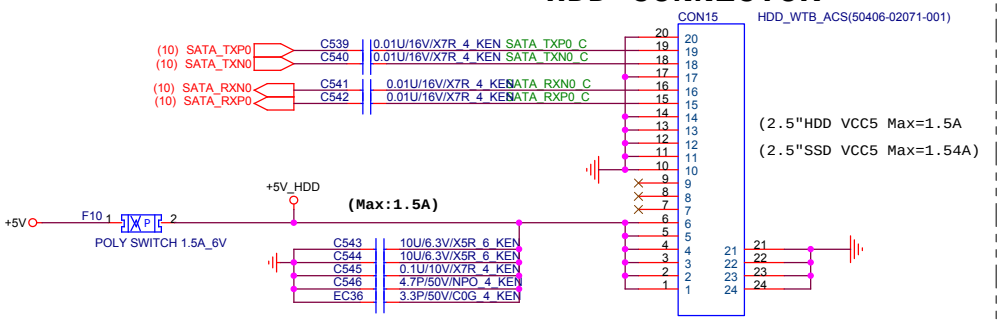

www.aitech1.ru

T/P Board to T/P(ALPS)

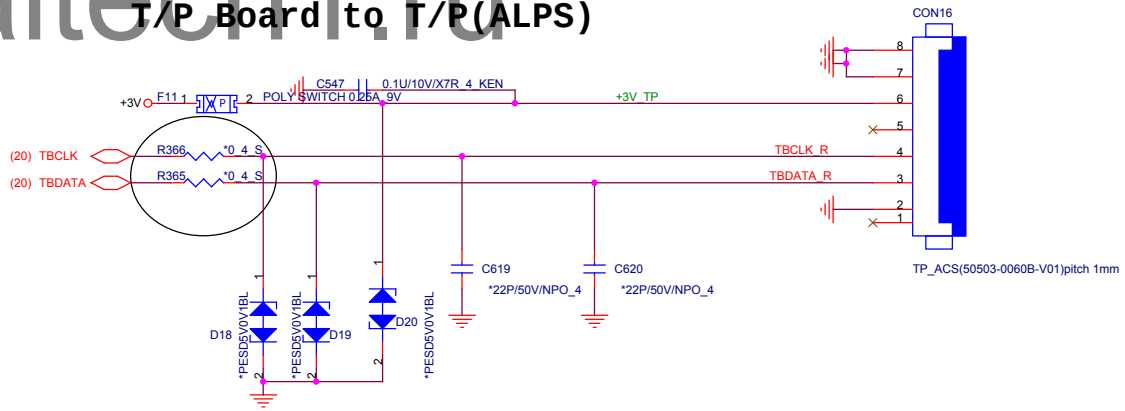

FAN

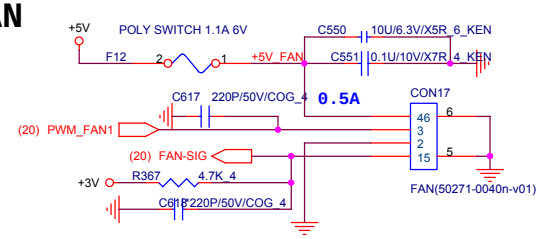

Quanta Computer Inc.

PROJECT : FF9

Size	Document Number	Rev
	HDD/ODD/TP/FAN	1A

Date: Wednesday, May 06, 2015 Sheet 27 of 43

3D/2D Camera & TouchScreen & DMIC

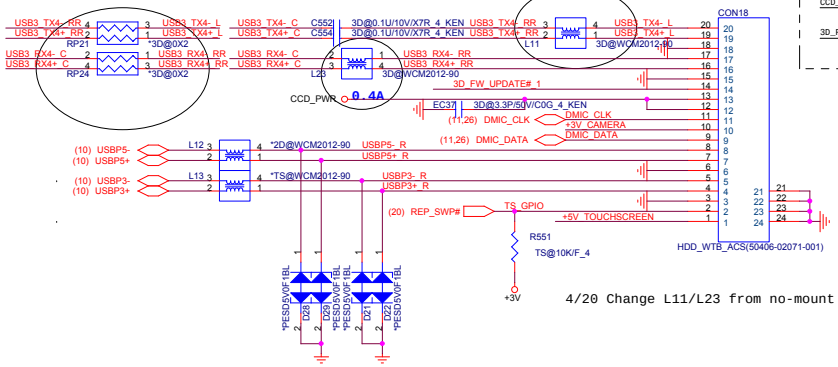

4/20 Change L11/L23 from no-mount to mount for EMI request

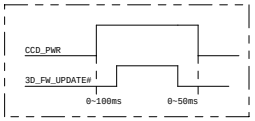

USB3.0 re-driver IC

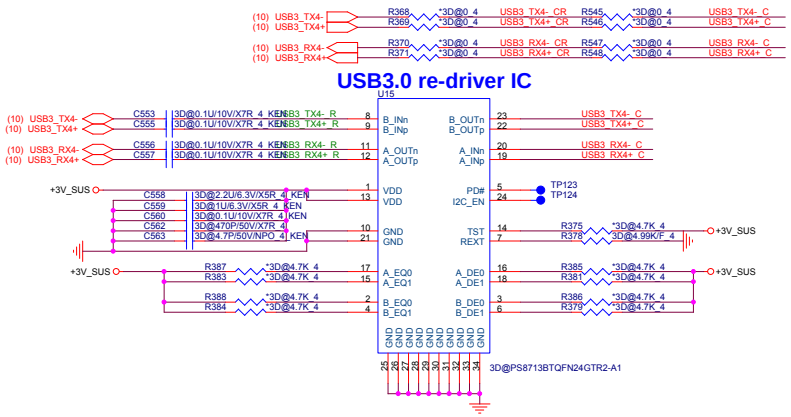

3D Camera Power

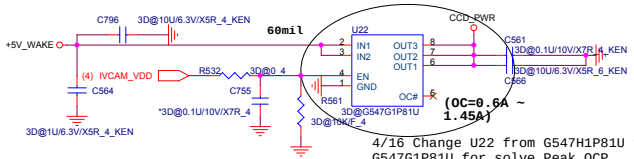

4/16 Change U22 from G547H1P81U to G547G1P81U for solve Peak OCP issue

2D Camera&DMIC Power

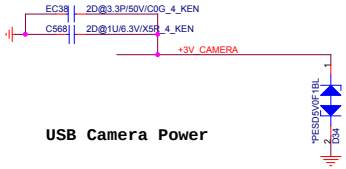

USB Camera Power

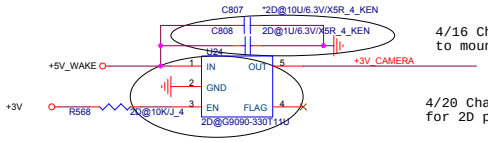

4/16 Change C808 1U from no-mount to mount for 2D camera drop issue

4/20 Change U24 part number from BU33TD3WG-GTR to G9090-330t11u for 2D power sw

Camera HD specification
Voltage: Max. 3.6V
Current : Max. 200mA
OCP: 200mA ~ 300mA

4/23 Change CCD_PWR to +5V

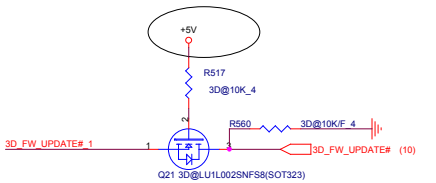

Touch Screen Power

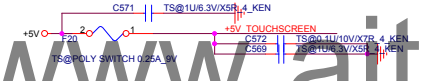

Limit Current: 220mA~700mA
Typ:200mA

Programmable output pre-emphasis level setting for channel A/B
3.3V tolerant. Internally pulled down at ~150K
[A/B_DE1, A/B_DE0] ==
LL: 3.5dB de-emphasis(defaul)
LH: NO de-emphasis
HL: 2.7dB de-emphasis
HH: 5dB de-emphasis

LFPS swing adjust. 3.3V tolerant. Internally pulled down at ~150K.
TEST ==
L: Normal LFPS swing(default)
H: Tune down LFPS swing

Equalizer control and program for channel A/B
3.3V tolerant. Internally pulled down at ~150K.
[A/B_EQ1, A/B_EQ0] ==
LL: Program EQ for channel loss up to 9.5dB(default)
LH: Program EQ for channel loss up to 13dB
HL: Program EQ for channel loss up to 4.5dB
HH: Program EQ for channel loss up to 7.5dB

Note:
REXT can be left open to get default swing setting
The programmable values from 2.5K to 10K

www.aitech1.ru

Power SW Board Connector

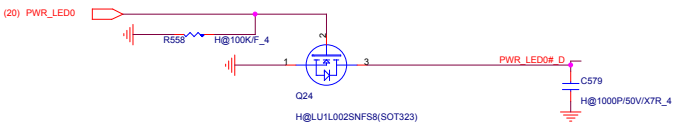

under SSD location for ME check EMI portion

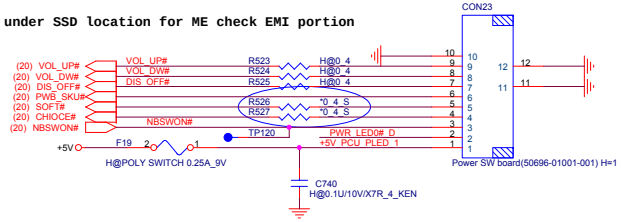

POWERSW board :
L SKU:High
H SKU:Low

Quanta Computer Inc.		
PROJECT : FF9		
Size	Document Number: PSW/DMIC/Camera/TS	Rev 1A
Date: Wednesday, May 06, 2015	Sheet 28 of 43	

Peak
Current : 2.0A,120mil

SSD CONNECTOR (Type M)

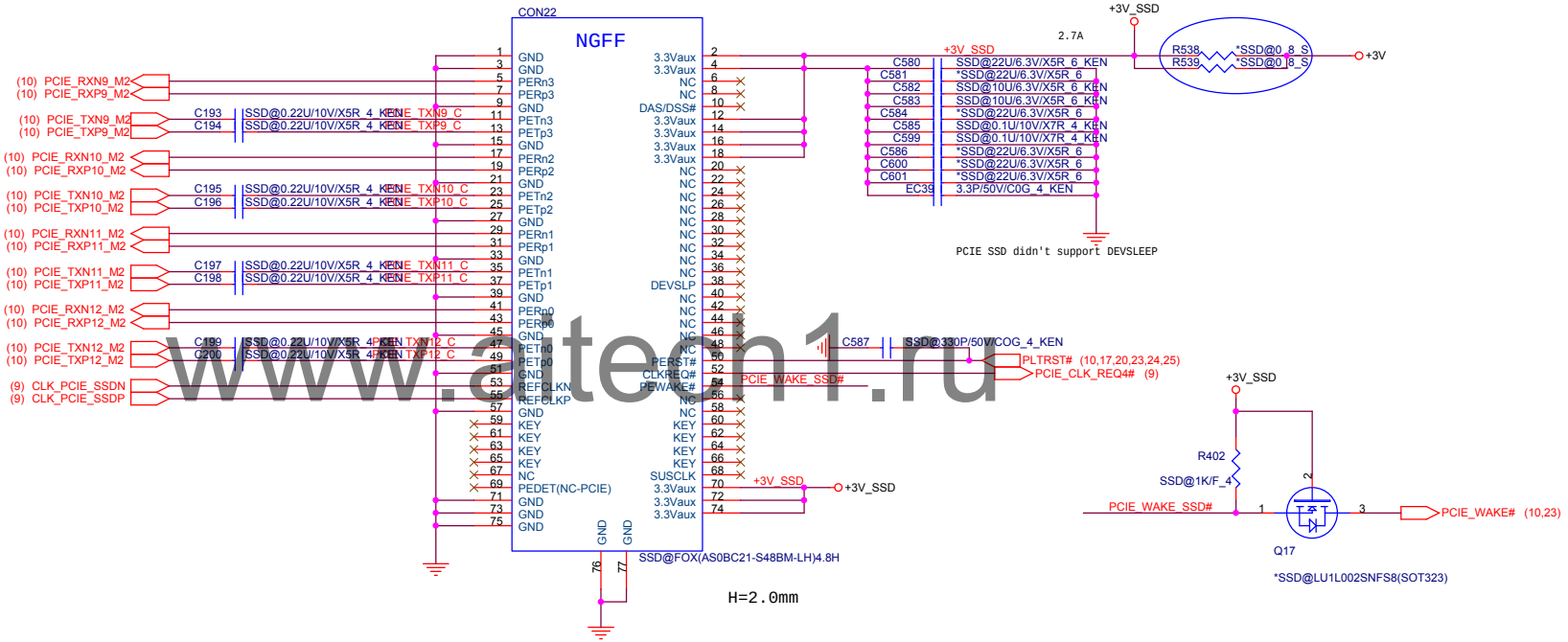

www.atech1.ru

Quanta Computer Inc.
PROJECT : FF9

Size	Document Number	Rev
	SSD CON	1A

Date: Wednesday, May 06, 2015 Sheet 29 of 43

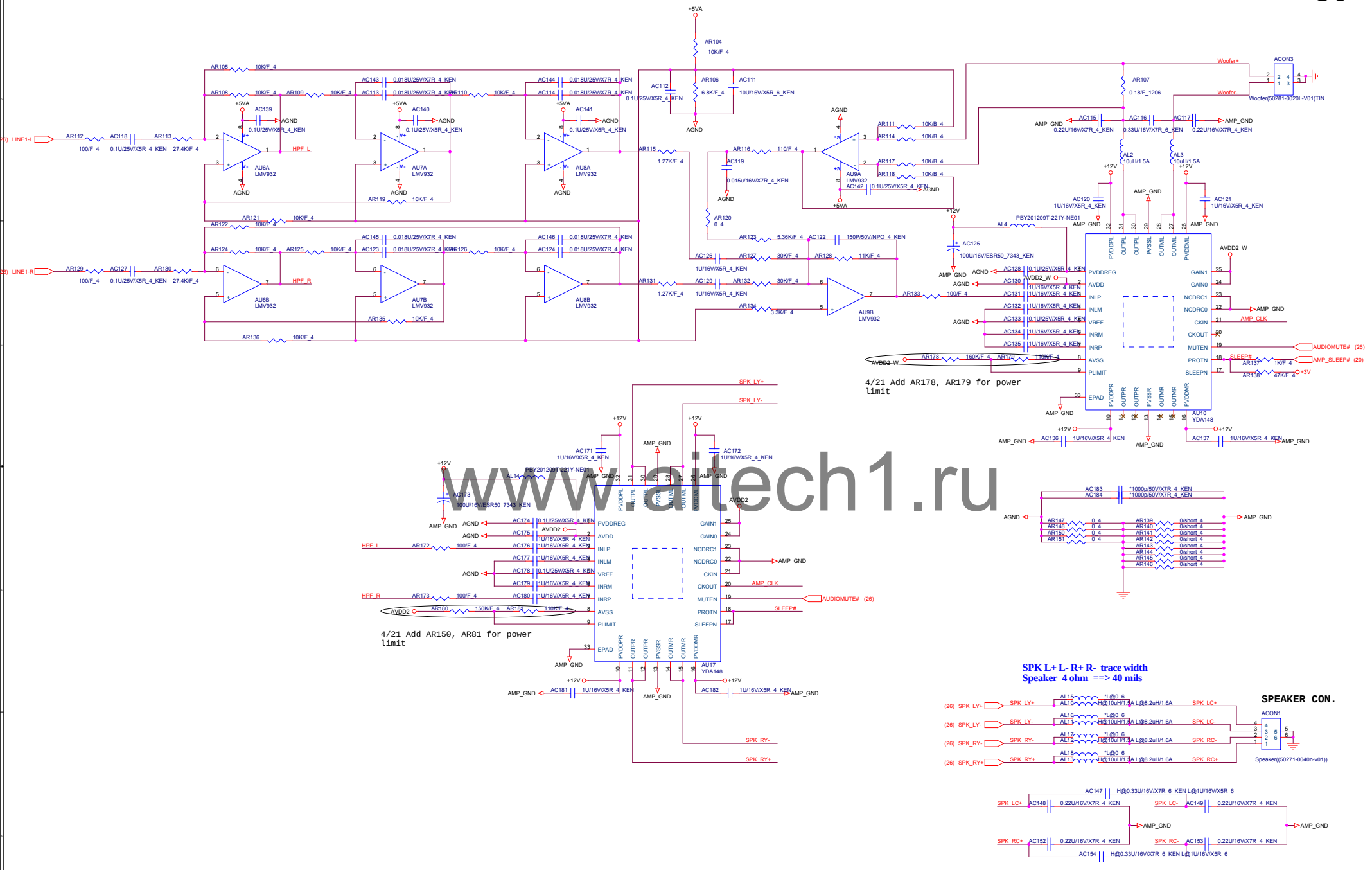

www.altech1.ru

Quanta Computer Inc.		
PROJECT : FF9		
Size	Document Number	Rev
	Audio AMP(YDA148)	1A
Date: Wednesday, May 06, 2015	Sheet 30 of 43	

I@ is for U22
E@ is for U23e

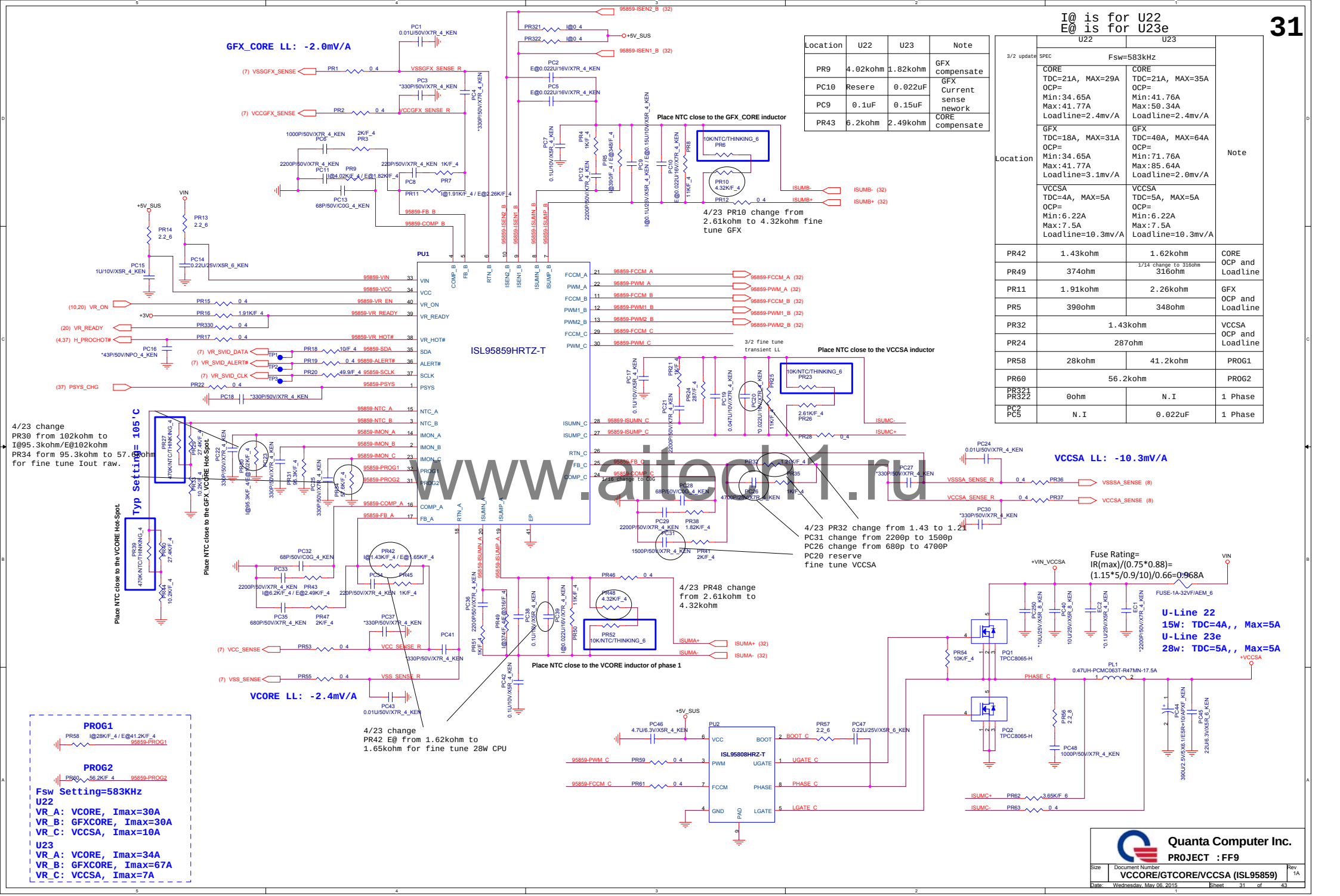

Location	U22	U23	Note
PR9	4.02kohm	1.82kohm	GFX compensate
PC10	Resere	0.022uF	GFX Current sense nework
PC9	0.1uF	0.15uF	
PR43	6.2kohm	2.49kohm	CORE compensate

Location	U22	U23	Note
3/2 update SPEC	Fsw=583kHz		
	CORE TDC=21A, MAX=29A OCP= Min:34.65A Max:41.77A Loadline=2.4mv/A	CORE TDC=21A, MAX=35A OCP= Min:41.76A Max:50.34A Loadline=2.4mv/A	
	GFX TDC=18A, MAX=31A OCP= Min:34.65A Max:41.77A Loadline=3.1mv/A	GFX TDC=40A, MAX=64A OCP= Min:71.76A Max:85.64A Loadline=2.0mv/A	
	VCCSA TDC=4A, MAX=5A OCP= Min:6.22A Max:7.5A Loadline=10.3mv/A	VCCSA TDC=5A, MAX=5A OCP= Min:6.22A Max:7.5A Loadline=10.3mv/A	
PR42	1.43kohm	1.62kohm	CORE OCP and Loadline
PR49	374ohm	1/14 change to 316ohm 316ohm	
PR11	1.91kohm	2.26kohm	GFX OCP and Loadline
PR5	390ohm	348ohm	
PR32	1.43kohm		VCCSA OCP and Loadline
PR24	287ohm		
PR58	28kohm	41.2kohm	PROG1
PR60	56.2kohm		PROG2
PR321 PR322	0ohm	N.I	1 Phase
PC2 PC5	N.I	0.022uF	1 Phase

www.aitech1.ru

VCC_CORE

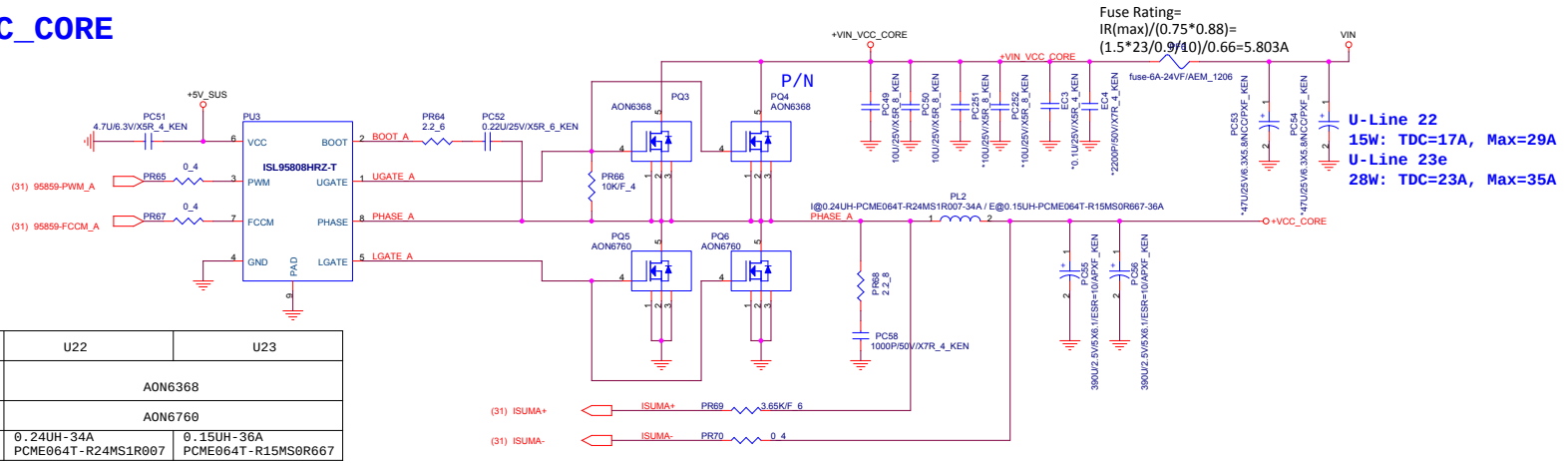

Location	U22	U23
PQ3 PQ4	AON6368	
PQ5 PQ6	AON6760	
PL2	0.24UH-34A PCME064T-R24MS1R007	0.15UH-36A PCME064T-R15MS0R667

GFX_CORE

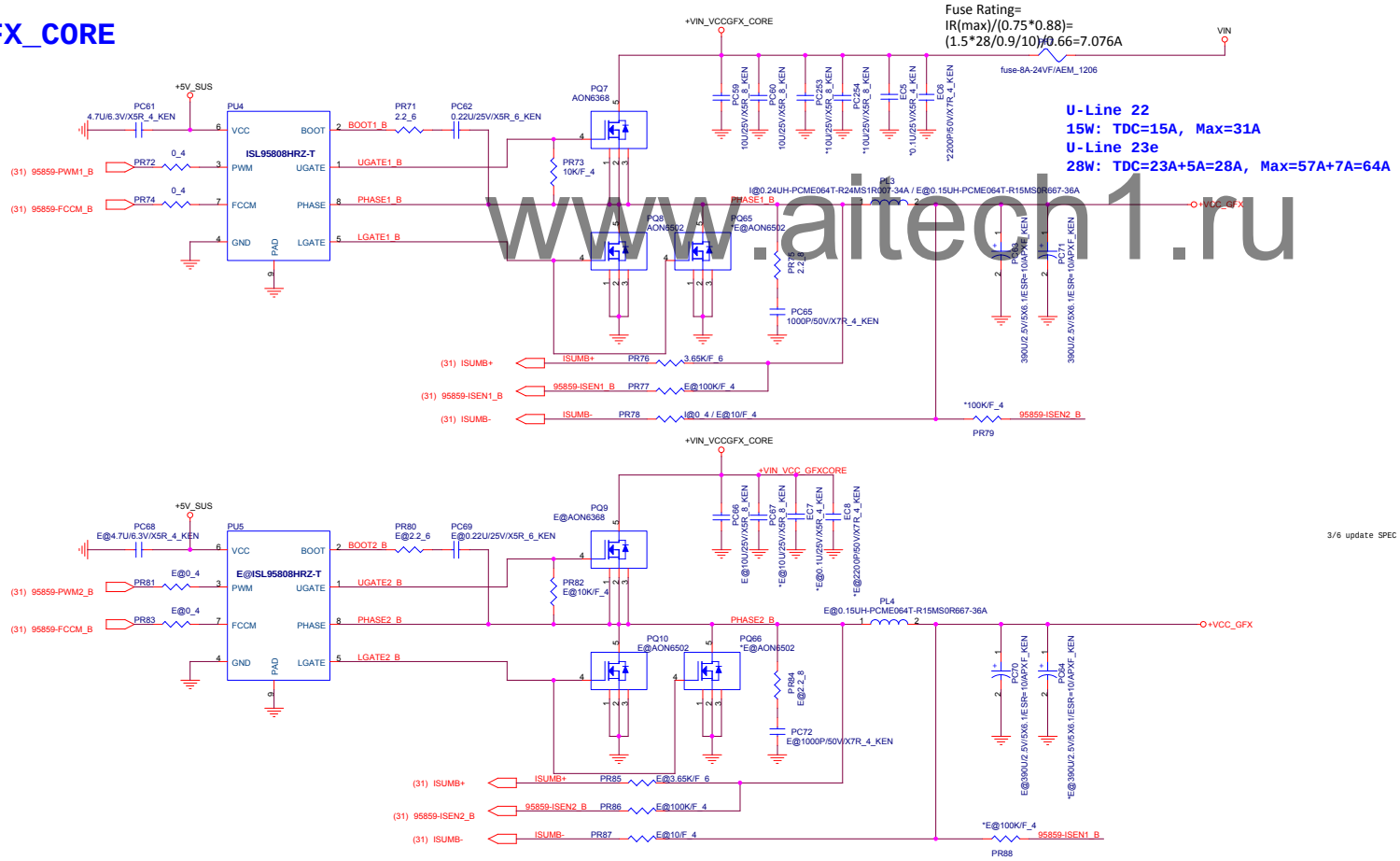

Location	U22	U23
PL3	0.24UH-34A PCME064T-R24MS1R007	0.15UH-36A PCME064T-R15MS0R667
PR77	Resere	100kohm
PR78	0ohm	10ohm
PL4	Resere	0.15UH-36A PCME064T-R15MS0R667
PC69	Resere	0.22U/25V/X5R_6_KEN
PR81,PR83	Resere	0_4
PR87	Resere	10/F_4
PC72	Resere	1000P/50V/X7R_4_KEN
PR86	Resere	100K/F_4
PR82	Resere	10K/F_4
PC66	Resere	10U/25V/X5R_8_KEN
PC67	Resere	*10U/25V/X5R_8_KEN
PR80	Resere	2.2_6
PR84	Resere	2.2_8
PR85	Resere	3.65K/F_6
PC70,PC64	Resere	390U/2.5V/5X6.1/ ESR=10/APXF_KEN
PC68	Resere	4.7U/6.3V/X5R_4_KEN
PU5	Resere	ISL95808HRZ-T
PQ9	Resere	AON6368
PQ10, PQ65,PQ66	Resere	AON6502
PR88	Resere	*100K/F_4
EC7	Resere	*0.1U/25V/X5R_4_KEN
EC8	Resere	*2200P/50V/X7R_4_KEN

3/6 update SPEC

www.aitech1.ru

Quanta Computer Inc.
PROJECT : FF9

Size	Document Number	Rev
	VCCORE/GTCORE/VCCSA (ISL95859)	1A

Date: Wednesday, May 06, 2015 Sheet 32 of 43

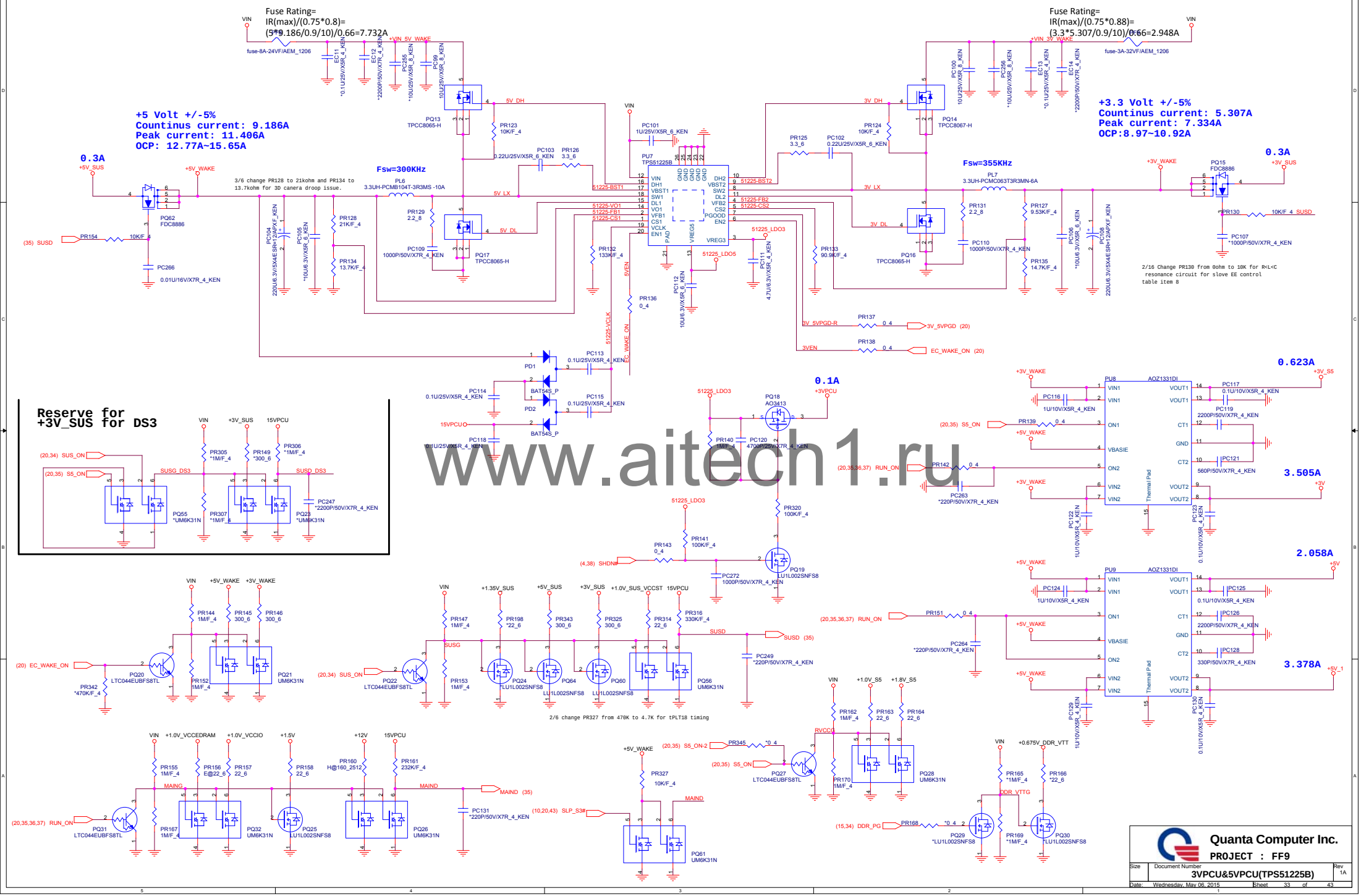

www.aitech1.ru

1.35VSUS & VTT_MEM

Fuse Rating=
IR(max)/(0.75*0.75)=
(1.35*6.98/0.9/12)/0.66=1.586A

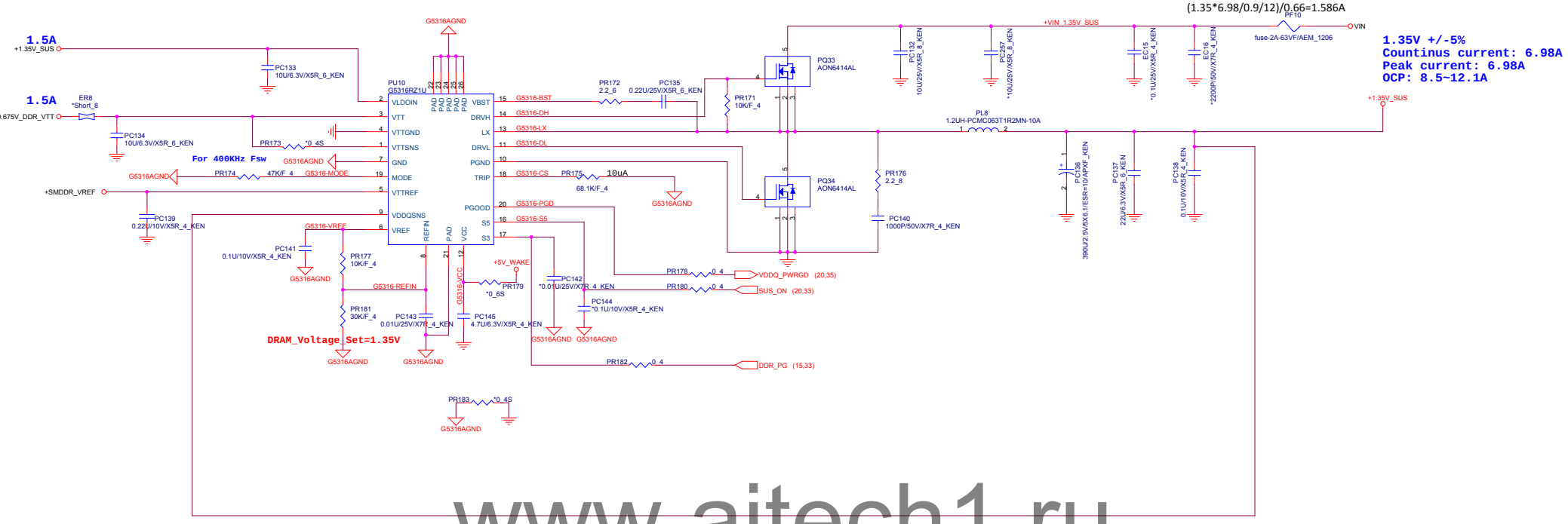

1.35V +/-5%
Countinus current: 6.98A
Peak current: 6.98A
OCP: 8.5~12.1A

www.aitech1.ru

MODE	Resistor on Mode	Fsw	Discharge Mode
3	200Kohm	400KHz	Tracking discharge
2	100Kohm	300KHz	
1	68Kohm	300KHz	**Non-tracking discharge**
0	**47Kohm**	**400KHz**	

STATE	S3	S5	1.35VSUS	VTTREF	VTT
S0	1	1	On	On	On
S3	0	1	On	On	Off/High Z
S4/S5	0	0	Off	Off	Off

Quanta Computer Inc.
PROJECT : FF9

Size	Document Number	Rev
	1.35VSUS/VTT_MEM	1A

Date: Wednesday, May 06, 2015 Sheet 34 of 43

+1.0V_S5

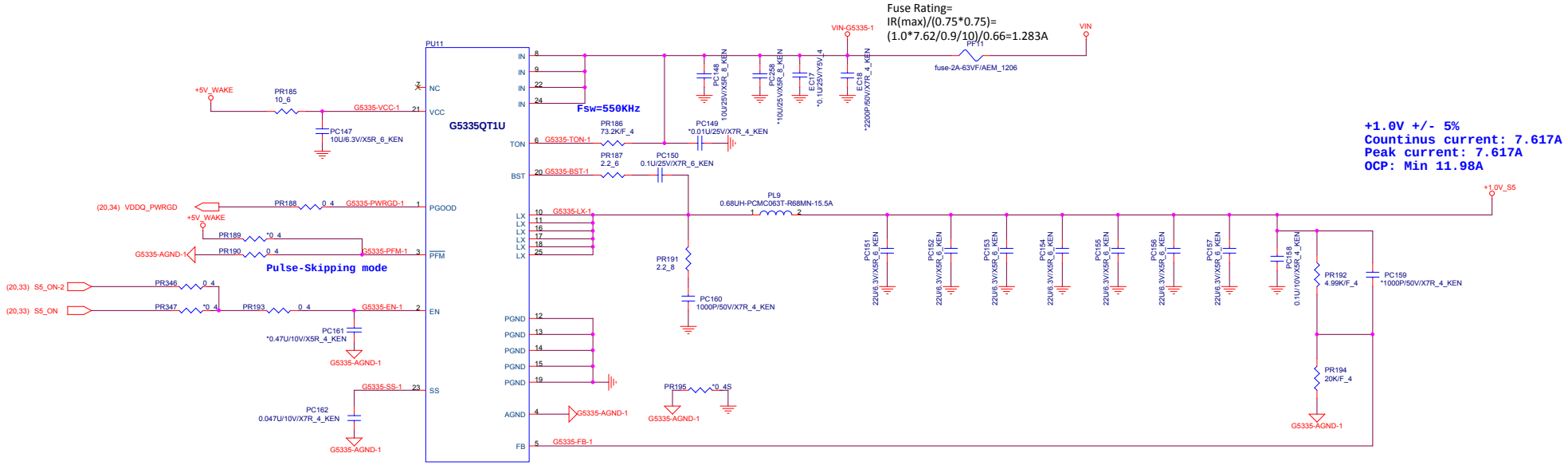

www.aitech1.ru

+1.8V_S5

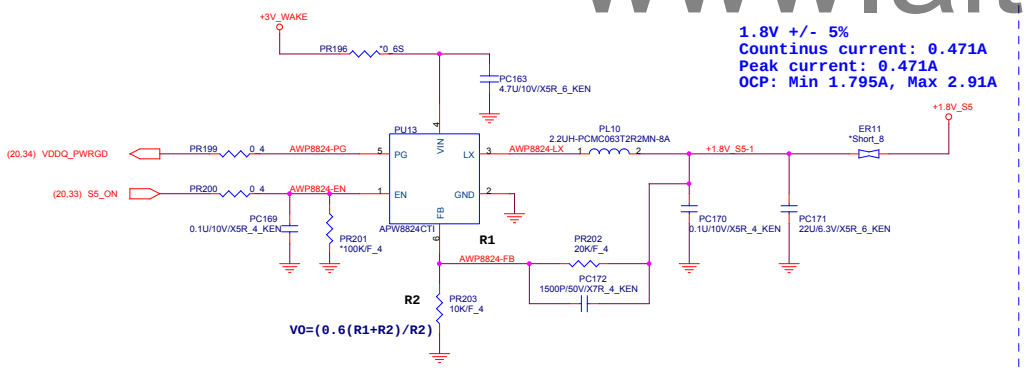

+1.0V_SUS_VCCST

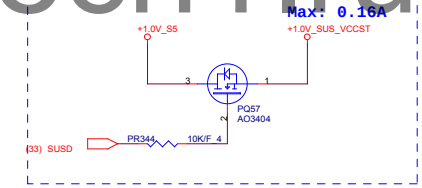

+1.0V_VCCIO

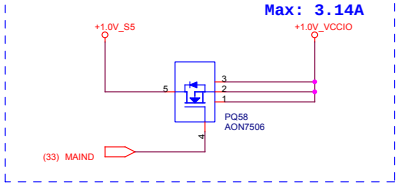

+1.5V

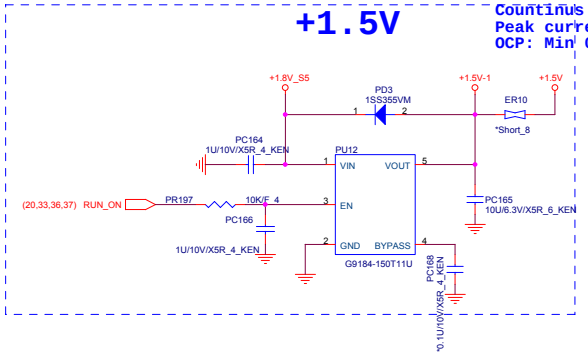

Quanta Computer Inc.

PROJECT : FF9

Size	Document Number	Rev
	+1.0V_S5 / +1.8V_S5 / +1.8V / +1.5V	1A

Date: Wednesday, May 06, 2015 Sheet 35 of 43

+1.0V_VCCEDRAM

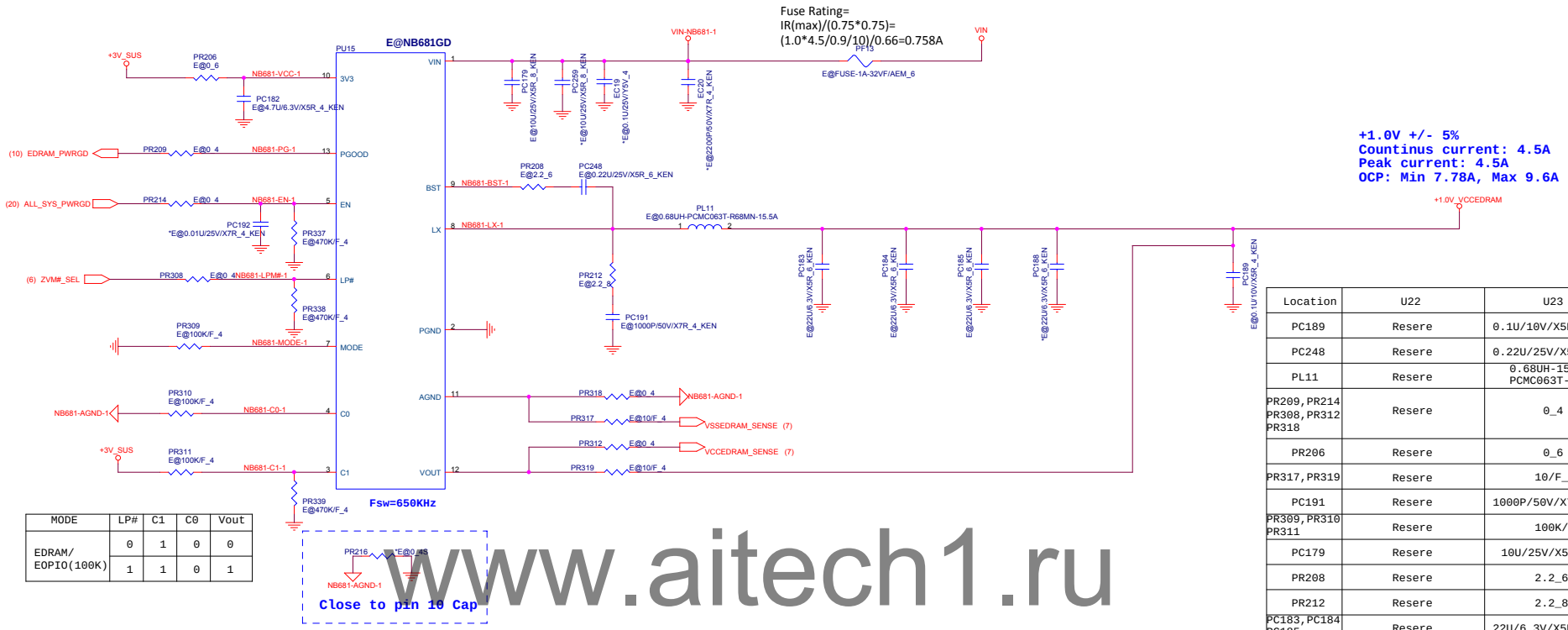

+1.0V +/- 5%
Countinus current: 4.5A
Peak current: 4.5A
OCP: Min 7.78A, Max 9.6A

MODE	LP#	C1	C0	Vout
EDRAM/ EOPIO(100K)	0	1	0	0
	1	1	0	1

Location	U22	U23
PC189	Resere	0.1U/10V/X5R_4_KEN
PC248	Resere	0.22U/25V/X5R_6_KEN
PL11	Resere	0.68UH-15.5A PCMC063T-R68MN
PR209,PR214 PR308,PR312 PR318	Resere	0_4
PR206	Resere	0_6
PR317,PR319	Resere	10/F_4
PC191	Resere	1000P/50V/X7R_4_KEN
PR309,PR310 PR311	Resere	100K/F_4
PC179	Resere	10U/25V/X5R_8_KEN
PR208	Resere	2.2_6
PR212	Resere	2.2_8
PC183,PC184 PC185	Resere	22U/6.3V/X5R_6_KEN
PC182	Resere	4.7U/6.3V/X5R_4_KEN
PF13	Resere	FUSE-1A-32VF/AEM_6
PU15	Resere	NB681GD
EC20	Resere	2200P/50V/X7R_4_KEN
EC19	Resere	0.1U/25V/Y5V_4
PC259	Resere	*10U/25V/X5R_8_KEN
PC192	Resere	*0.01U/25V/X7R_4_KEN
PC188	Resere	*22U/6.3V/X5R_6_KEN
PR337,PR338 PR339	Resere	470k/F_4

1/14 Add

www.aitech1.ru

+12V for Audio AMP

12V +/- 5%
Countinus current: 1.058A
Peak current: 1.058A
OCP:1.12~1.97A

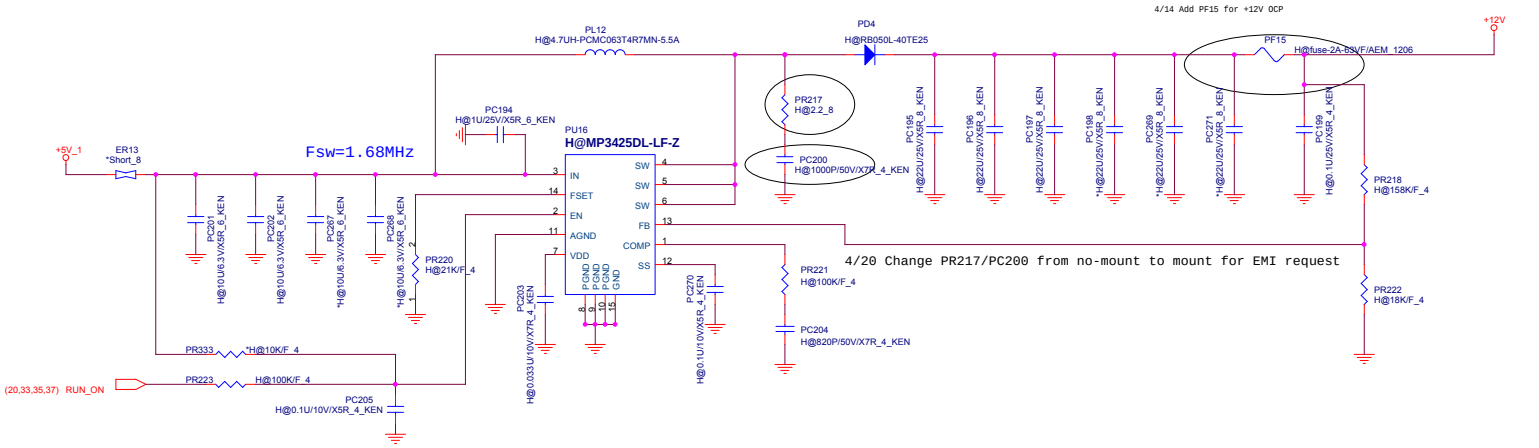

4/20 Change PR217/PC200 from no-mount to mount for EMI request

Quanta Computer Inc.
PROJECT : FF9

Size	Document Number	Rev
	+1.0V_VCCEDRAM / +12V	1A

Date: Wednesday, May 06, 2015 Sheet 36 of 43

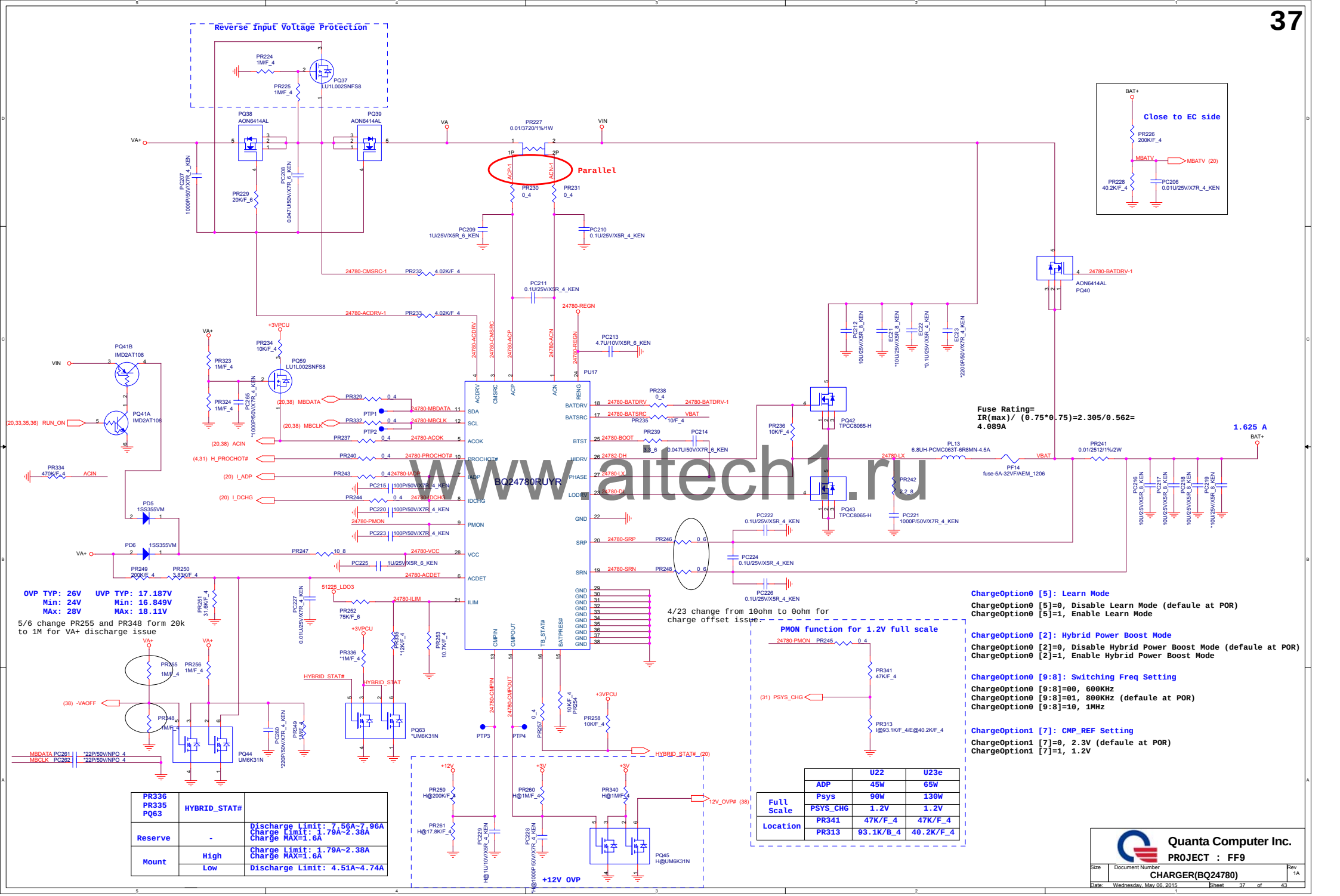

PR336 PR335 PQ63	HYBRID_STAT#	
Reserve	-	Discharge Limit: 7.56A~7.96A Charge Limit: 1.79A~2.38A Charge MAX=1.6A
Mount	High	Charge Limit: 1.79A~2.38A Charge MAX=1.6A
	Low	Discharge Limit: 4.51A~4.74A

		U22	U23e
Full Scale	ADP	45W	65W
	Psys	90W	130W
	PSYS_CHG	1.2V	1.2V
Location	PR341	47K/F_4	47K/F_4
	PR313	93.1K/B_4	40.2K/F_4

www.aitech1.ru

AC IN

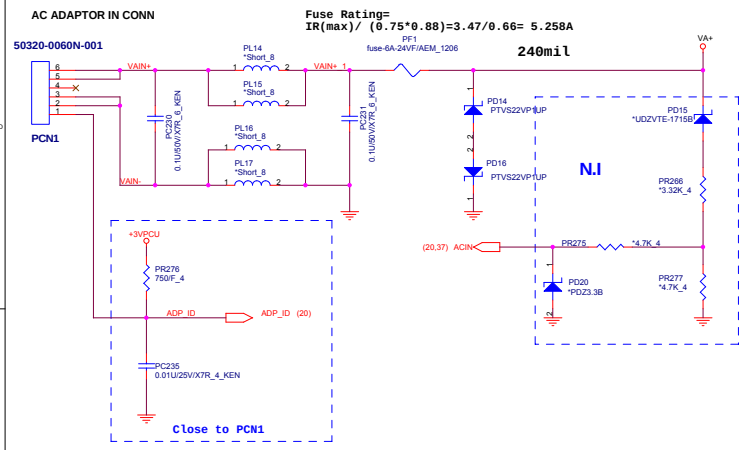

Thermal Protection

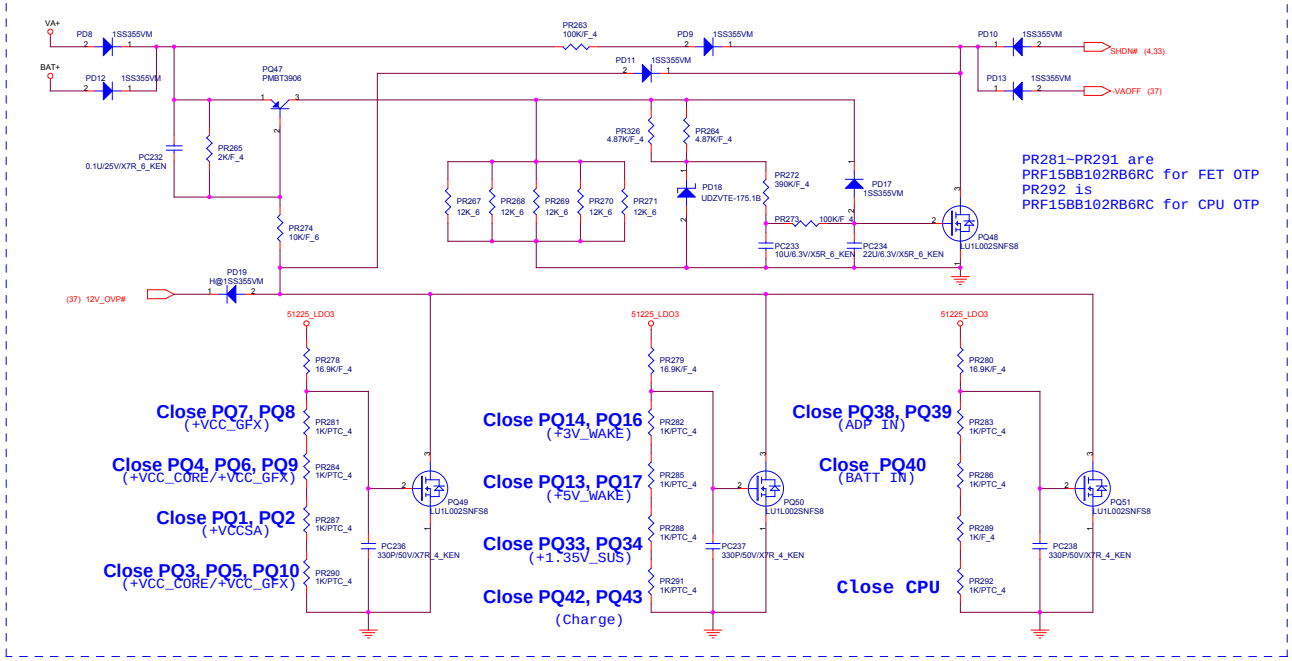

Adapter discharge

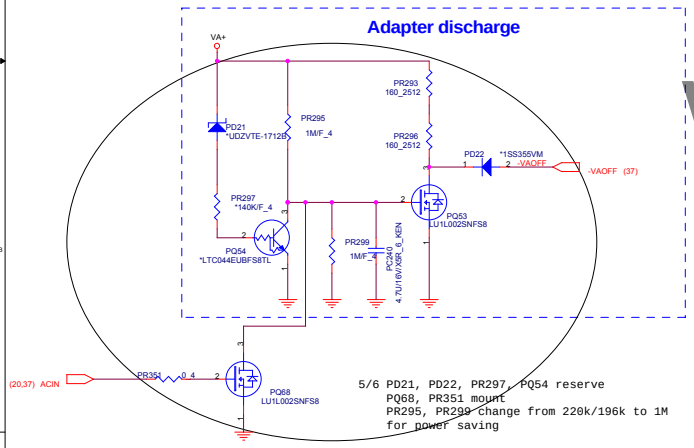

5/6 PD21, PD22, PR297, PQ54 reserve
PQ68, PR351 mount
PR295, PR299 change from 220k/196k to 1M
for power saving

Shipping Mode

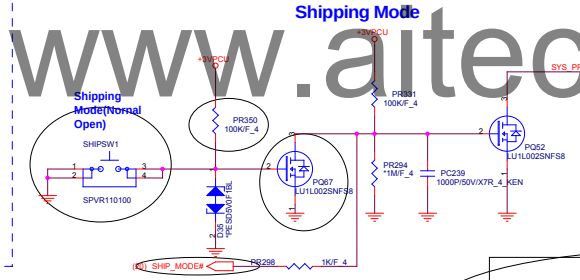

4/14 1.Change SHIP SW1 from
SPVR310100 to SPVR110100 for Nornal
open type)
2.Add PR350 100K and D35 PQ67 for
SHIP mode

	SYS_PRS#	Battery output FET
DIMM COVER mount	L	ON
DIMM COVER NO mount	H	OFF

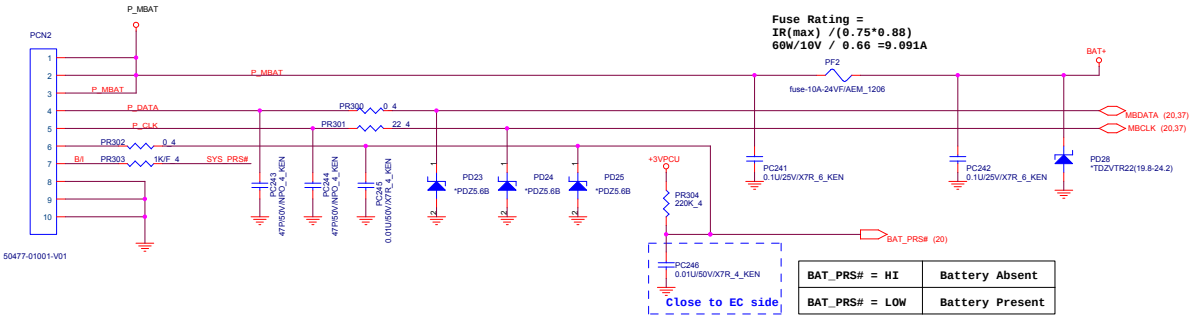

BAT_PRS# = HI	Battery Absent
BAT_PRS# = LOW	Battery Present

www.aitech1.ru

Quanta Computer Inc.
PROJECT : FF9

Size	Document Number	Rev
	ADP IN / BAT IN / Thermal Protection	1A

Date: Wednesday, May 06, 2015 Sheet 38 of 43

OS status	S0	S3		(Soft OFF)	(Soft OFF)	(Soft OFF)	(Soft OFF)	(Soft OFF)
H/W status	S0	S3		S4 (Win8 off) RTC wake Enable WOLAN Enable	S4 (Win8 off) RTC wake Disable WOLAN Disable	S5 Charge Enable	S5 Charge Disable WoL Disable	S5 WoL Enable
RUN_ON	H	L		L	L	L	L	L
+3V	H	L		L	L	L	L	L
+5V	H	L		L	L	L	L	L
+0.675V_DDR_VTT	H	L		L	L	L	L	L
+12V	H	L		L	L	L	L	L
+1.5V	H	L		L	L	L	L	L
+1.0V_VCCEDRAM	H	L		L	L	L	L	L
+VCCSA	H	L		L	L	L	L	L
+VCC_GFX	H	L		L	L	L	L	L
+VCC_CORE	H	L		L	L	L	L	L
+1.0V_VCCIO(+1.0V_VCCSTG)	H	L		L	L	L	L	L
SUS_ON	H	H		L	L	L	L	L
+5V_SUS	H	H		L	L	L	L	L
+3V_SUS	H	H		L	L	L	L	L
+1.35V_SUS	H	H		L	L	L	L	L
S5_ON	H	H		H	L	L	L	H
+1.8V_S5(+1.8V_S5_VEDRAM)	H	H		H	L	L	L	H
+3V_S5	H	H		H	L	L	L	H
+1.0V_S5	H	H		H	L	L	L	H
EC_WAKE_ON	H	H		H	L	H	L	H
+3V_WAKE	H	H		H	L	H	L	H
+5V_WAKE	H	H		H	L	H	L	H

(+1.0V_S5:For VCCPRIM_ CORE/VCCPRIM_1P /VCCMPHYAON_1P /VCCMPHYGT/VCCAMPHYPLL/ VCCAPLL/VCCSRAM/VCCCLK1~6)/VCCST/VCCPLL

www.aitech1.ru

Quanta Computer Inc.

PROJECT : FF9

Size	Document Number	Rev
	POWER MAP	1A

Date: Wednesday, May 06, 2015 Sheet 39 of 43

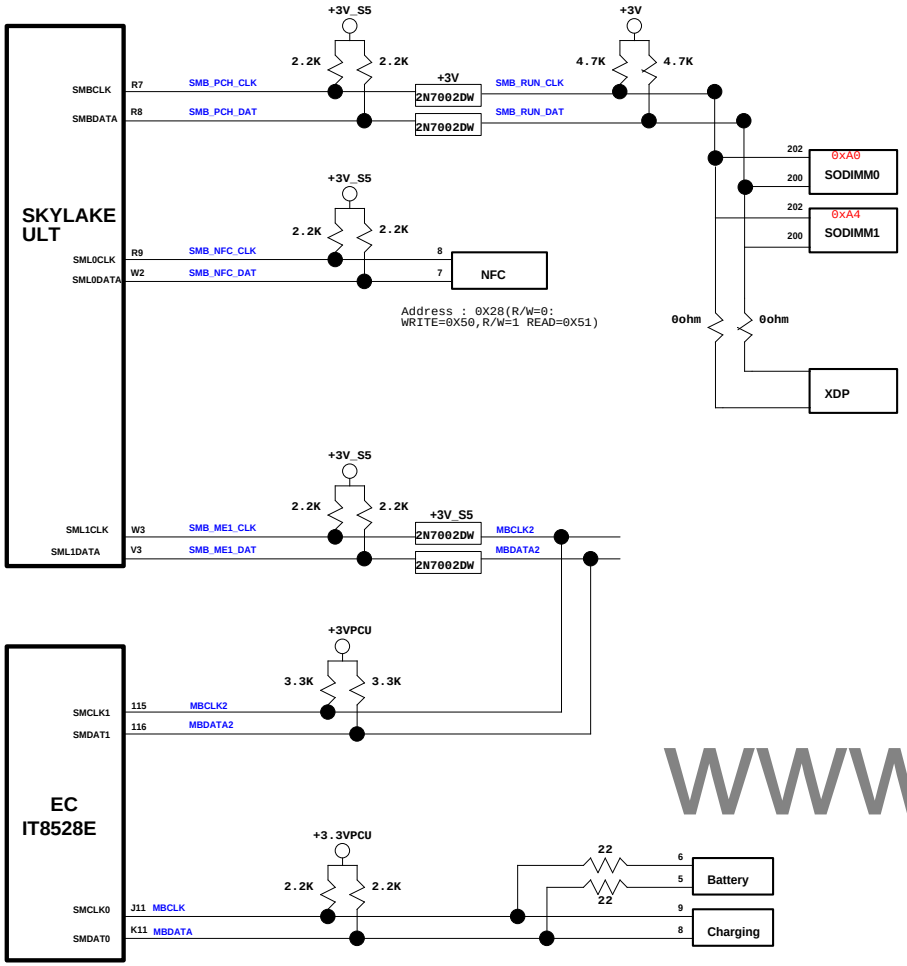

www.aitech1.ru

Function	IC	SMBus Address
Thermal IC	NCT7717U	1001000xb (0x90)
Charge IC	ISL88732HRTZ-T	TBD
Battery	Battery	TBD
NFC	TBD	TBD

Quanta Computer Inc.
PROJECT :FF9

Size	Document Number	Rev
	SMBUS	1A

Date: Wednesday, May 06, 2015 Sheet 40 of 43

SkyLake ULT Power-Up Sequencing (G3-->S0-->S3-->S4-->S5)

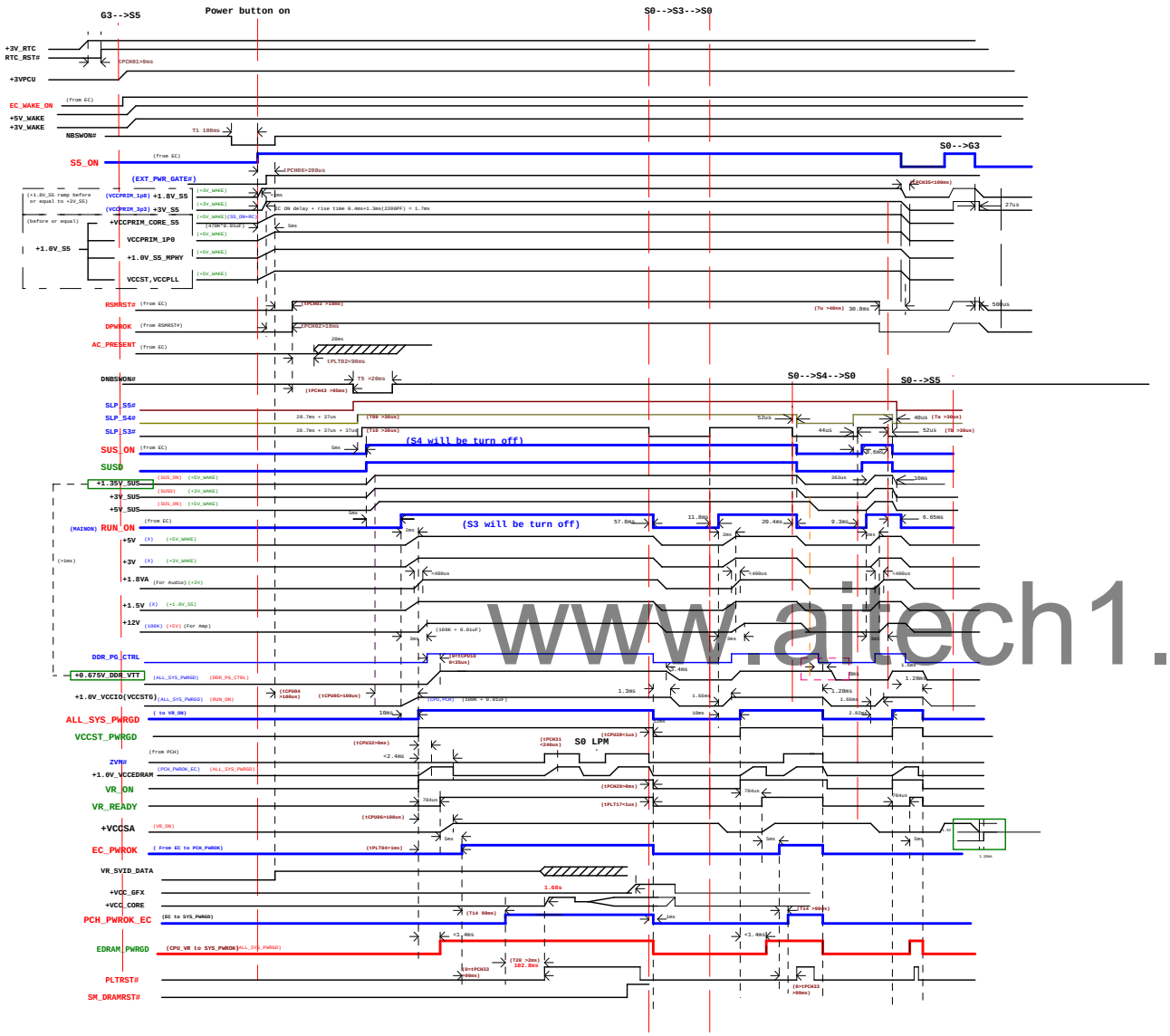

www.aitech1.ru

Quanta Computer Inc.
PROJECT :FF9
Power Sequence

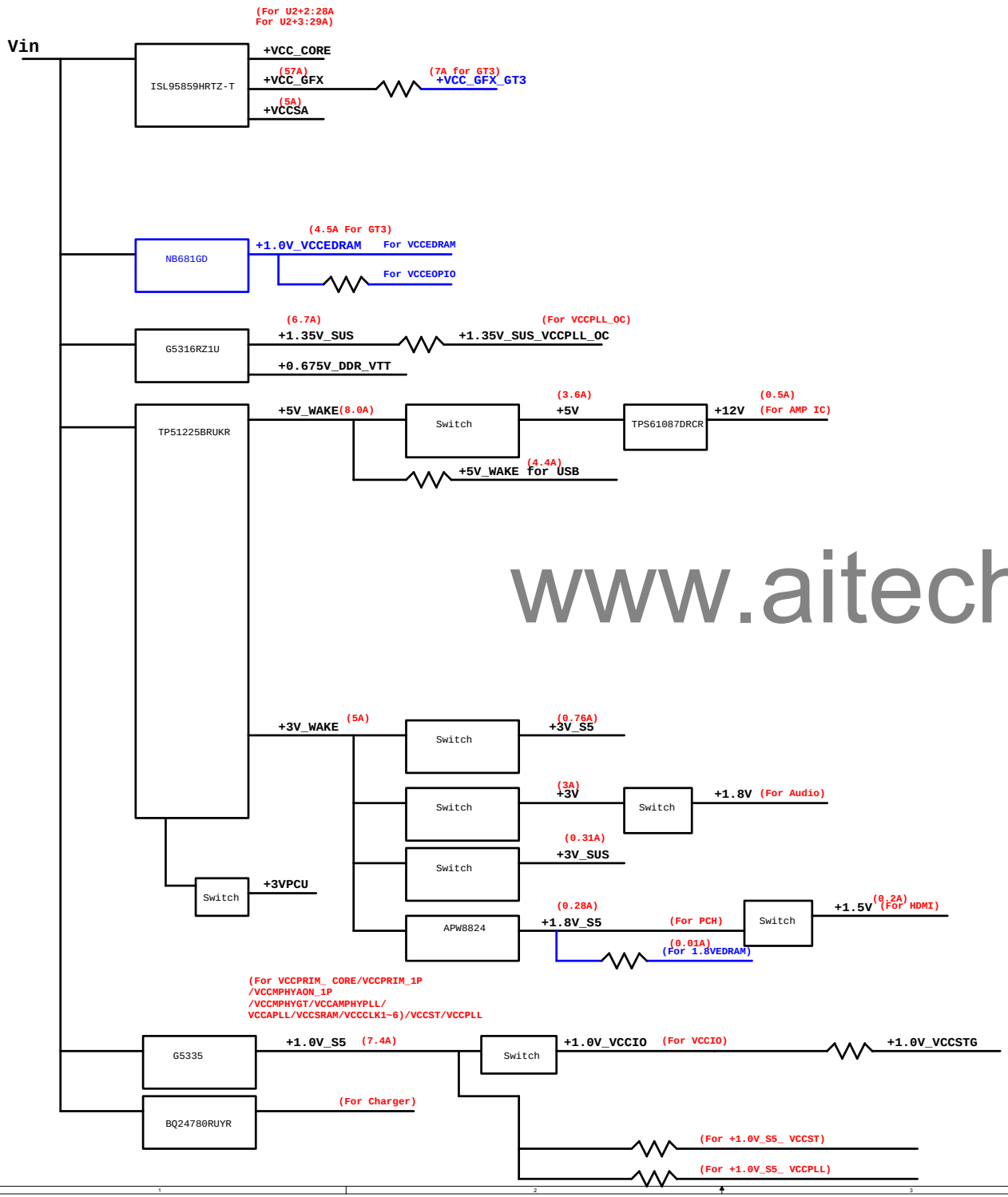

www.aitech1.ru

Quanta Computer Inc.

PROJECT : FF9

Size	Document Number	Rev
	Power Diagram	1A

Date: Wednesday, May 06, 2015 Sheet 42 of 43

(I Pin1) = Intel DG Pin1 insch

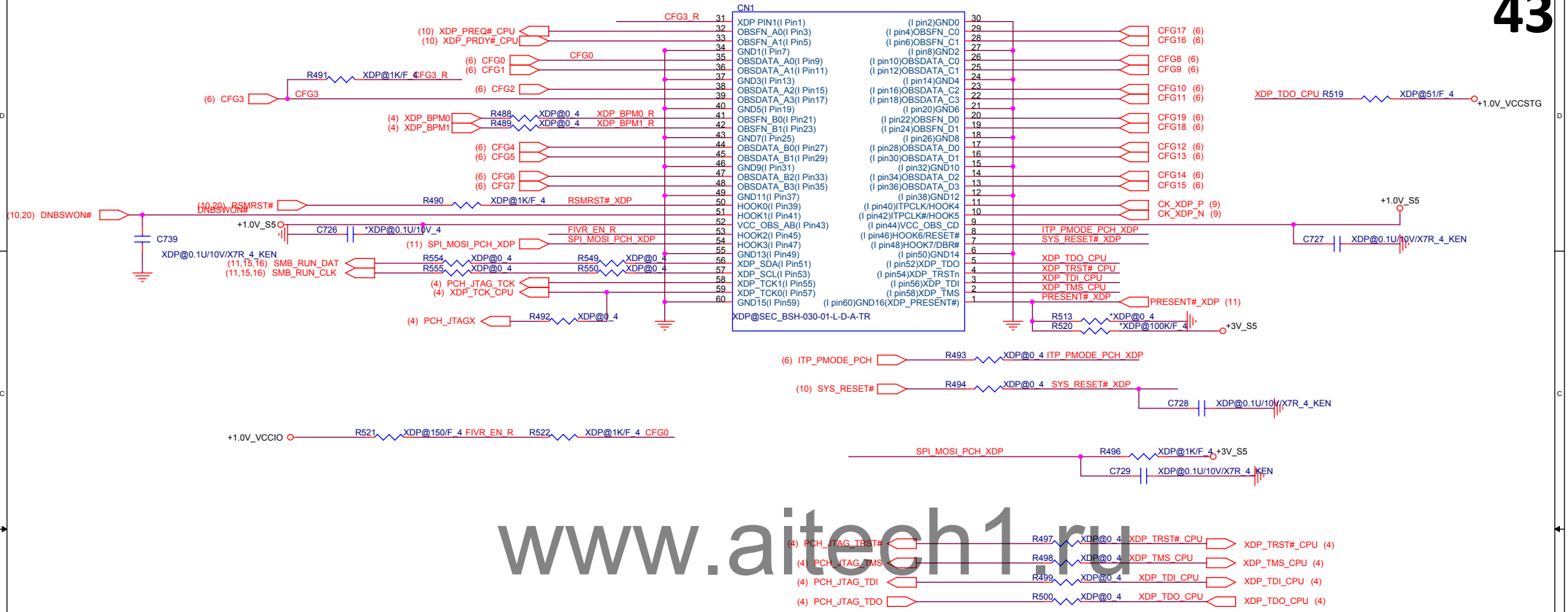

www.aitech1.ru

APS

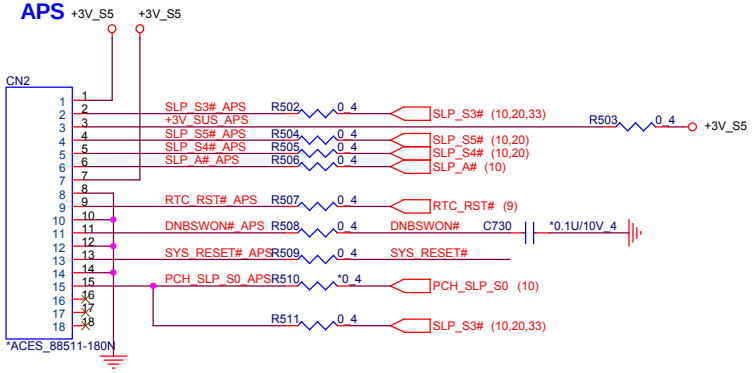

Quanta Computer Inc.			
PROJECT : FF9			
Size	Document Number		Rev
	HSW XDP & APS		A1
Date: Wednesday, May 06, 2015	Sheet 43 of 43		